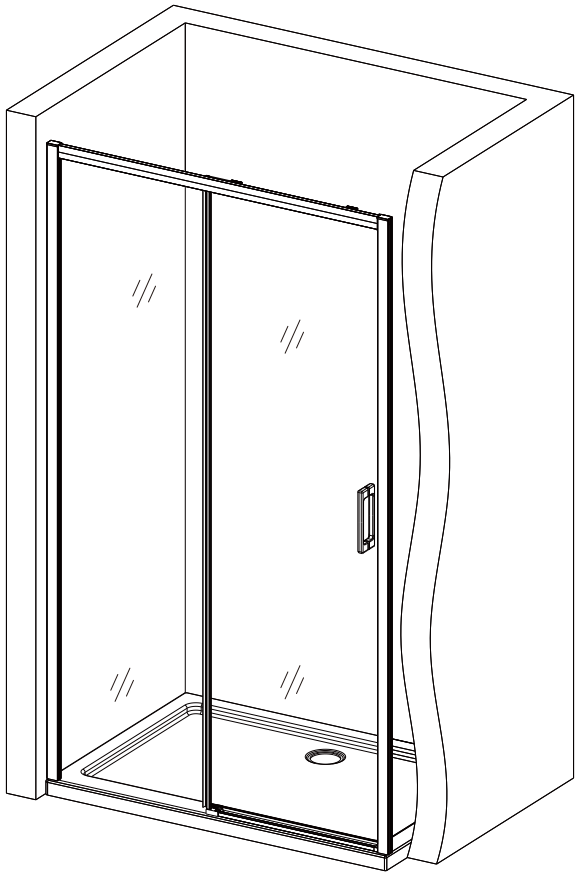

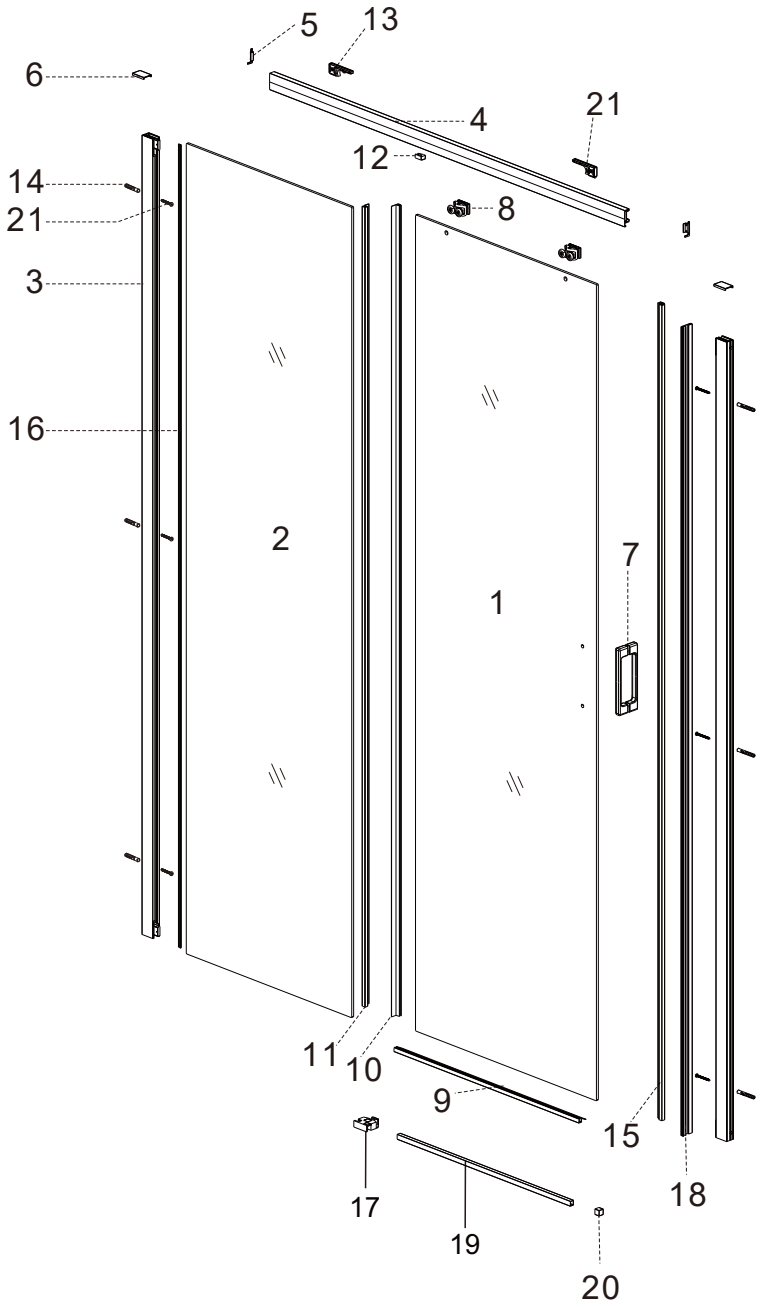
5
13
6
4
21
12
14
8
21
3
16
2
1
7
11
10
9
15
18
17
19
20

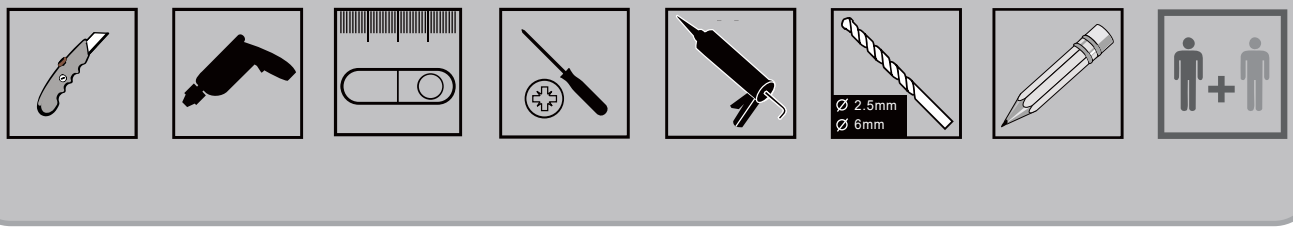

1 X1	2 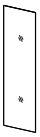 X1	3 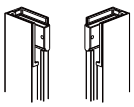 X1 X1	4 X1	5 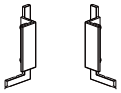 X1 X1	6 X2	7 X1
8 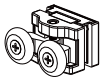 X2	9 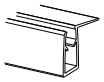 X1	10 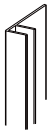 X1	11 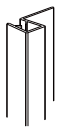 X1	12 X1 X1	13 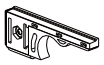 X1	14 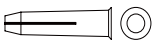 X6
15 X1	16 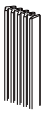 X1	17 X1	18 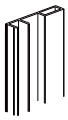 X1	19 X1	20 X1	21 ST3.5X32 X6
22 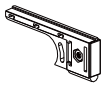 X1	23 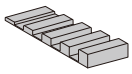 X1					

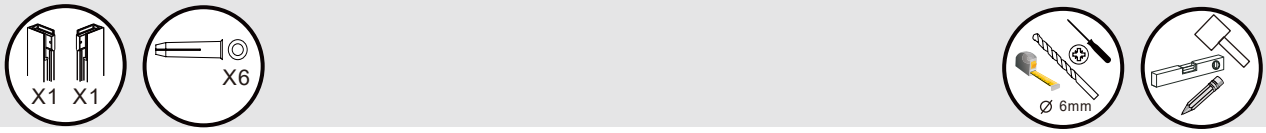

1

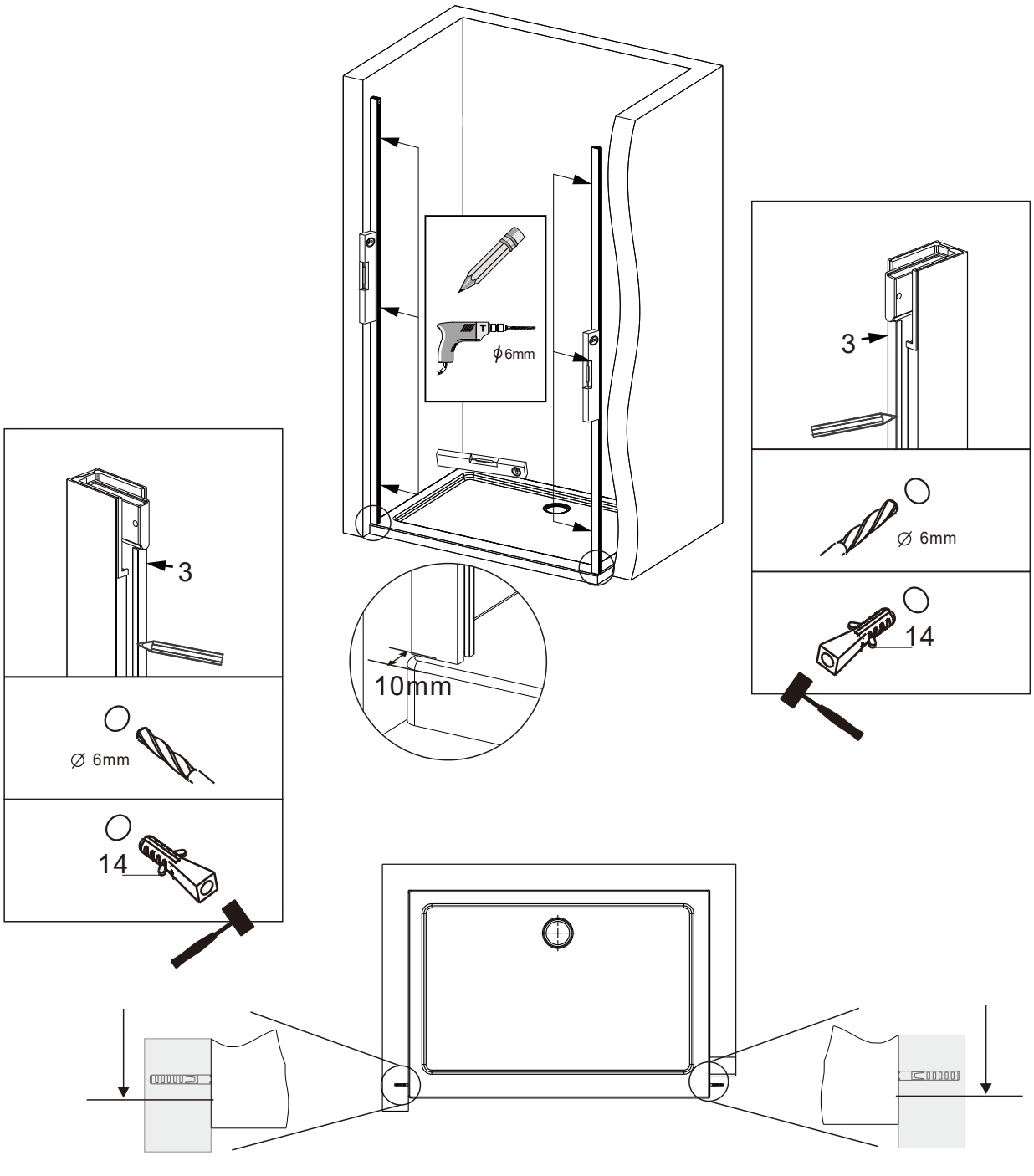

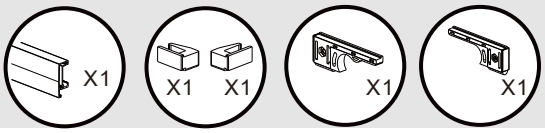

2

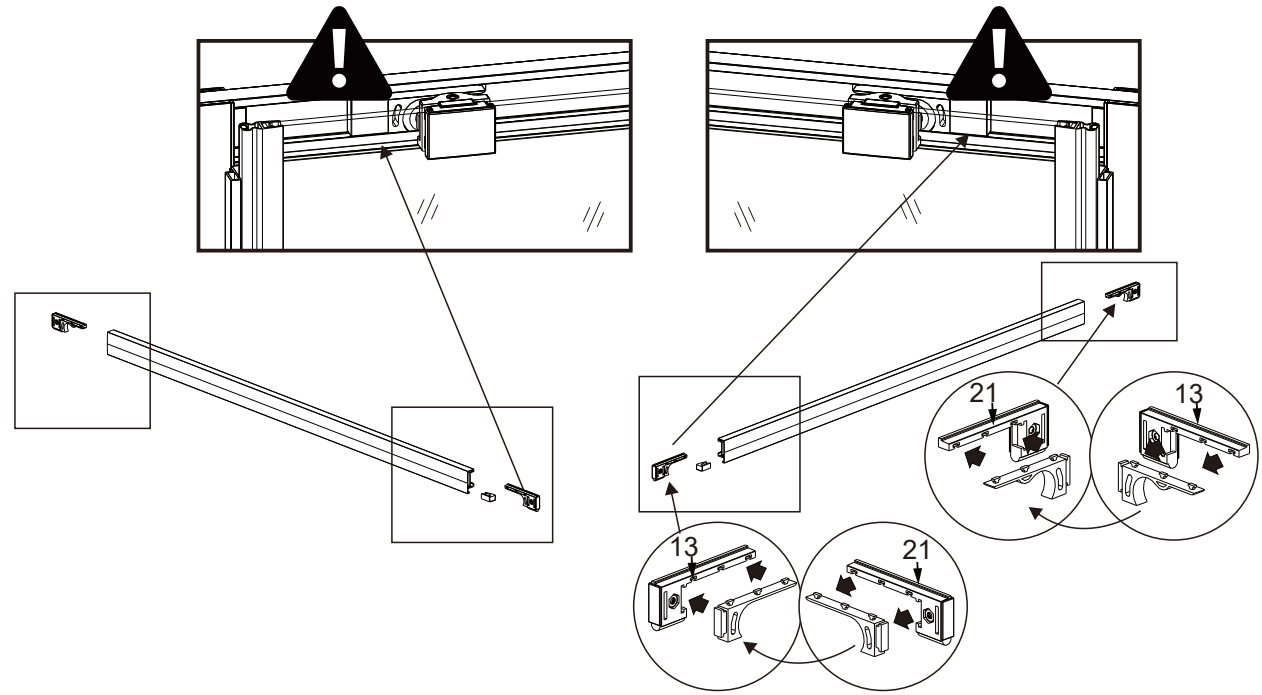

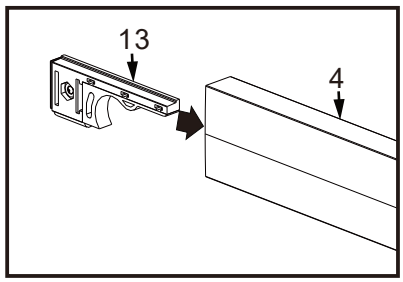

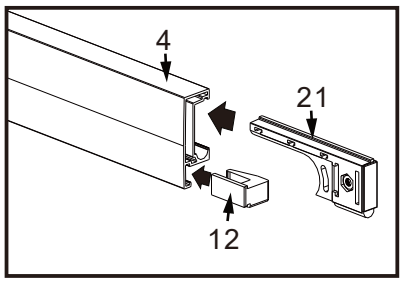

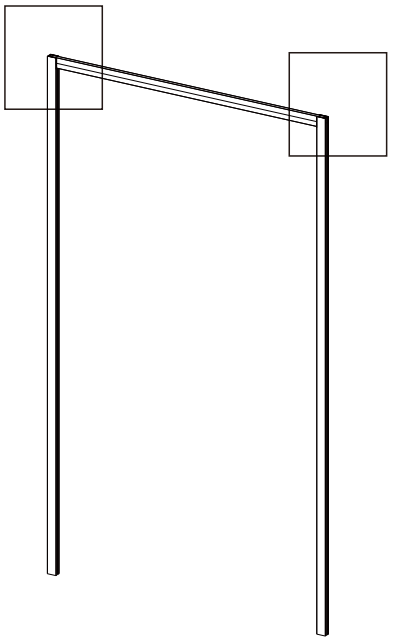

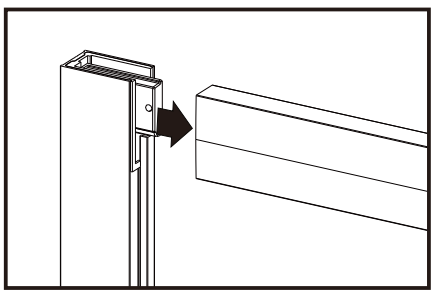

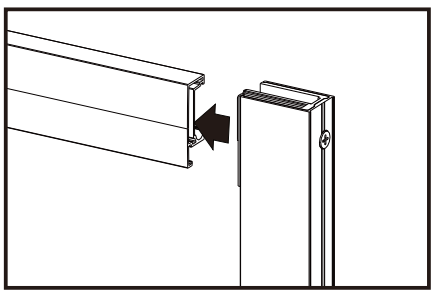

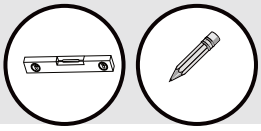

3

	X	Y
1000	985-1035	(X-985)/2
1050	1035-1085	(X-1035)/2
1100	1085-1135	(X-1085)/2
1150	1135-1185	(X-1135)/2
1200	1185-1235	(X-1185)/2
1250	1235-1285	(X-1235)/2
1300	1285-1335	(X-1285)/2
1350	1335-1385	(X-1335)/2
1400	1385-1435	(X-1385)/2
1450	1435-1485	(X-1435)/2
1500	1485-1535	(X-1485)/2
1550	1535-1585	(X-1535)/2
1600	1585-1635	(X-1585)/2
1650	1635-1685	(X-1635)/2
1700	1685-1735	(X-1685)/2

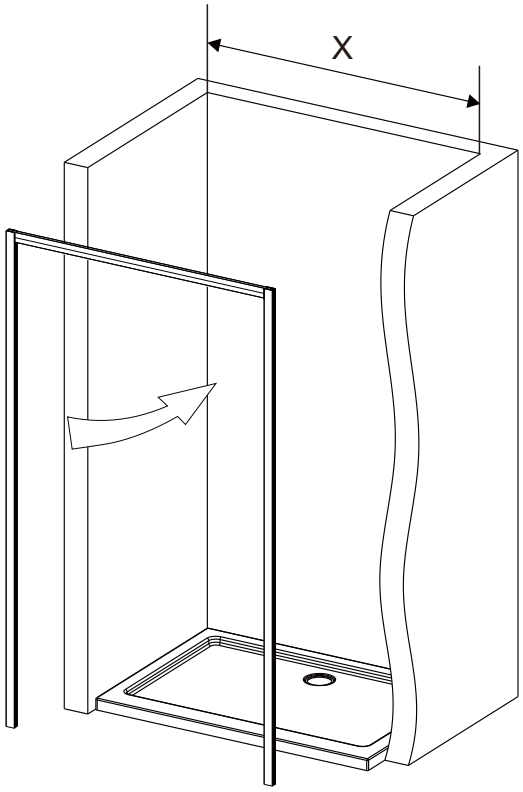

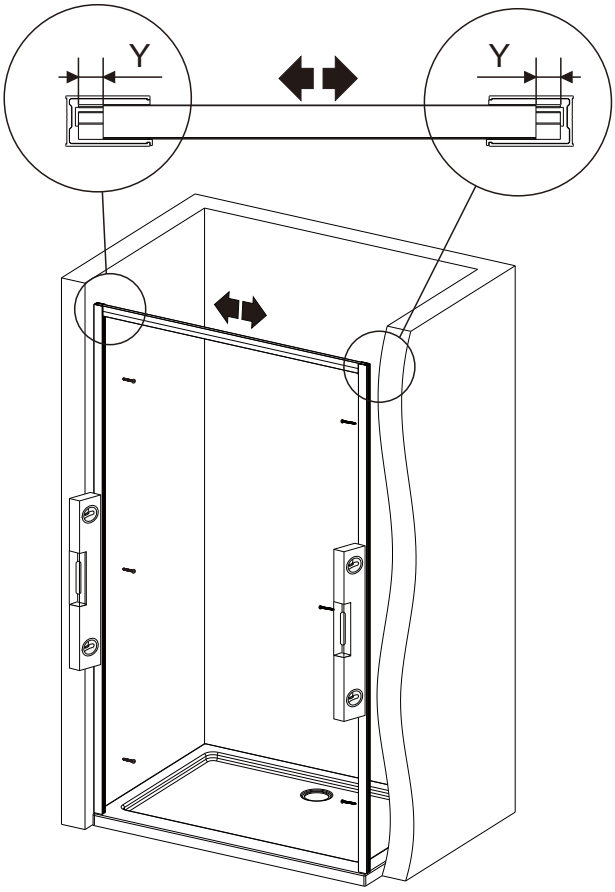

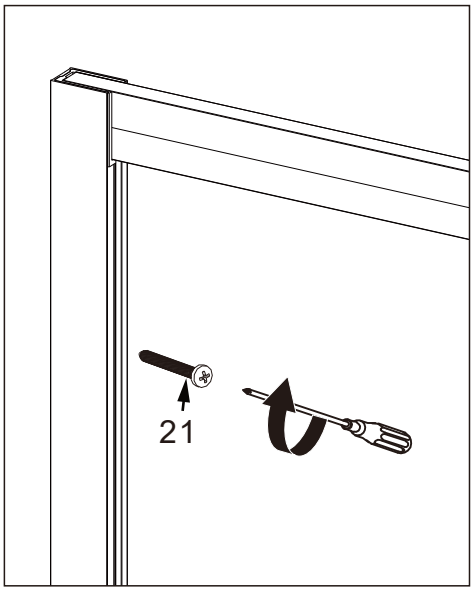

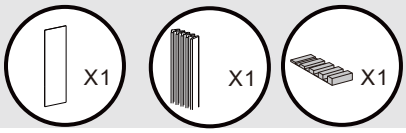

4

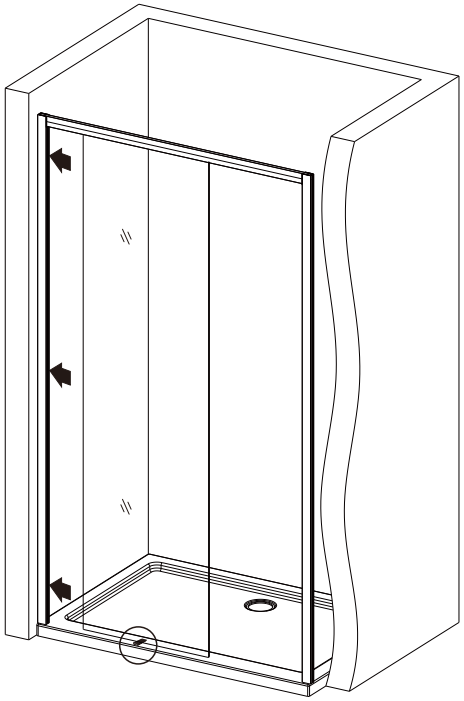

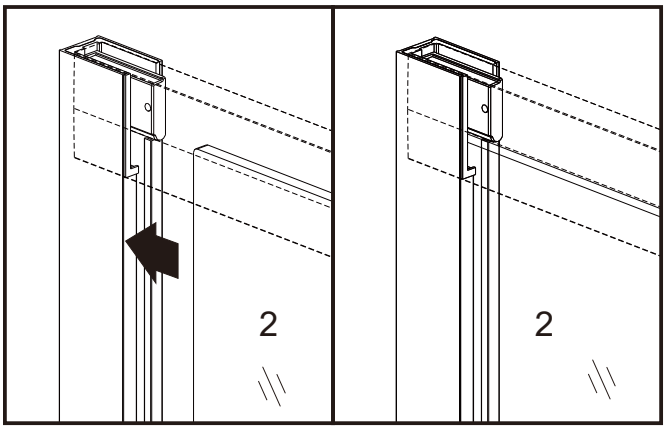

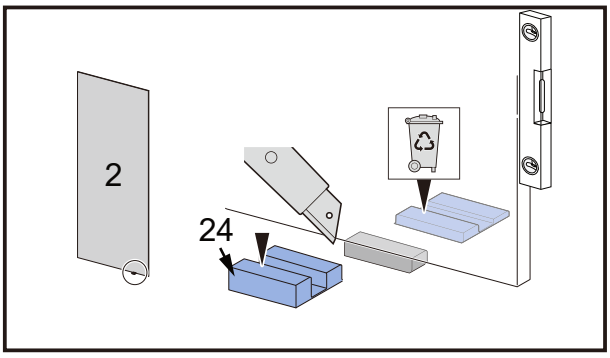

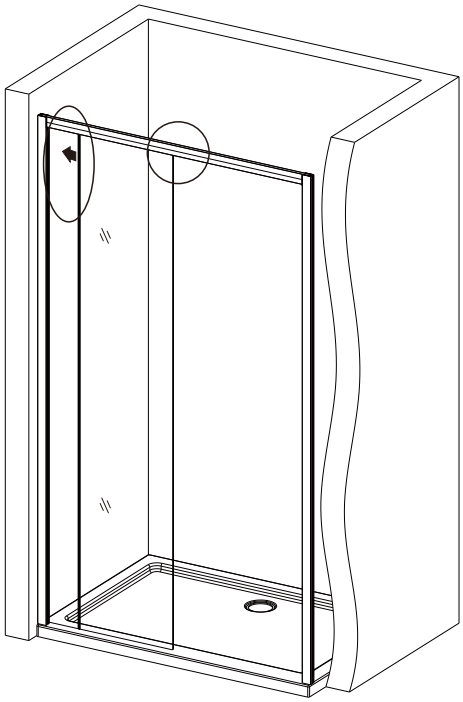

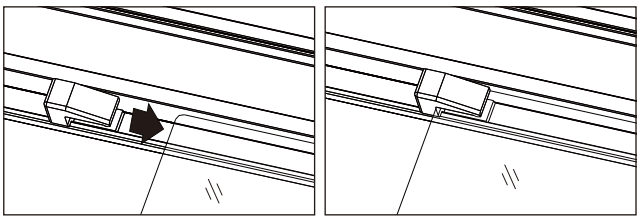

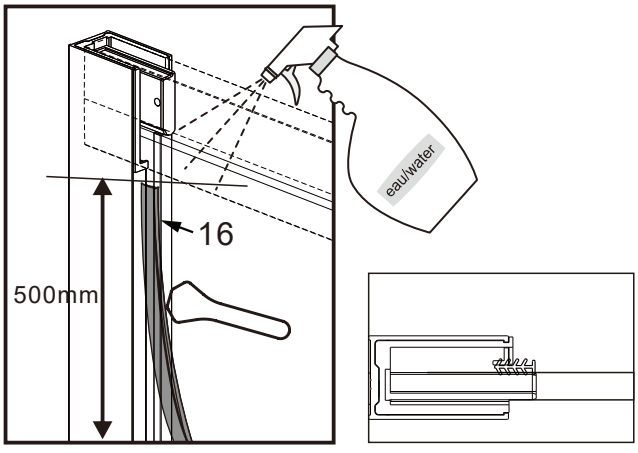

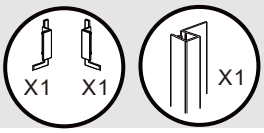

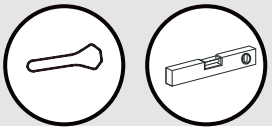

5

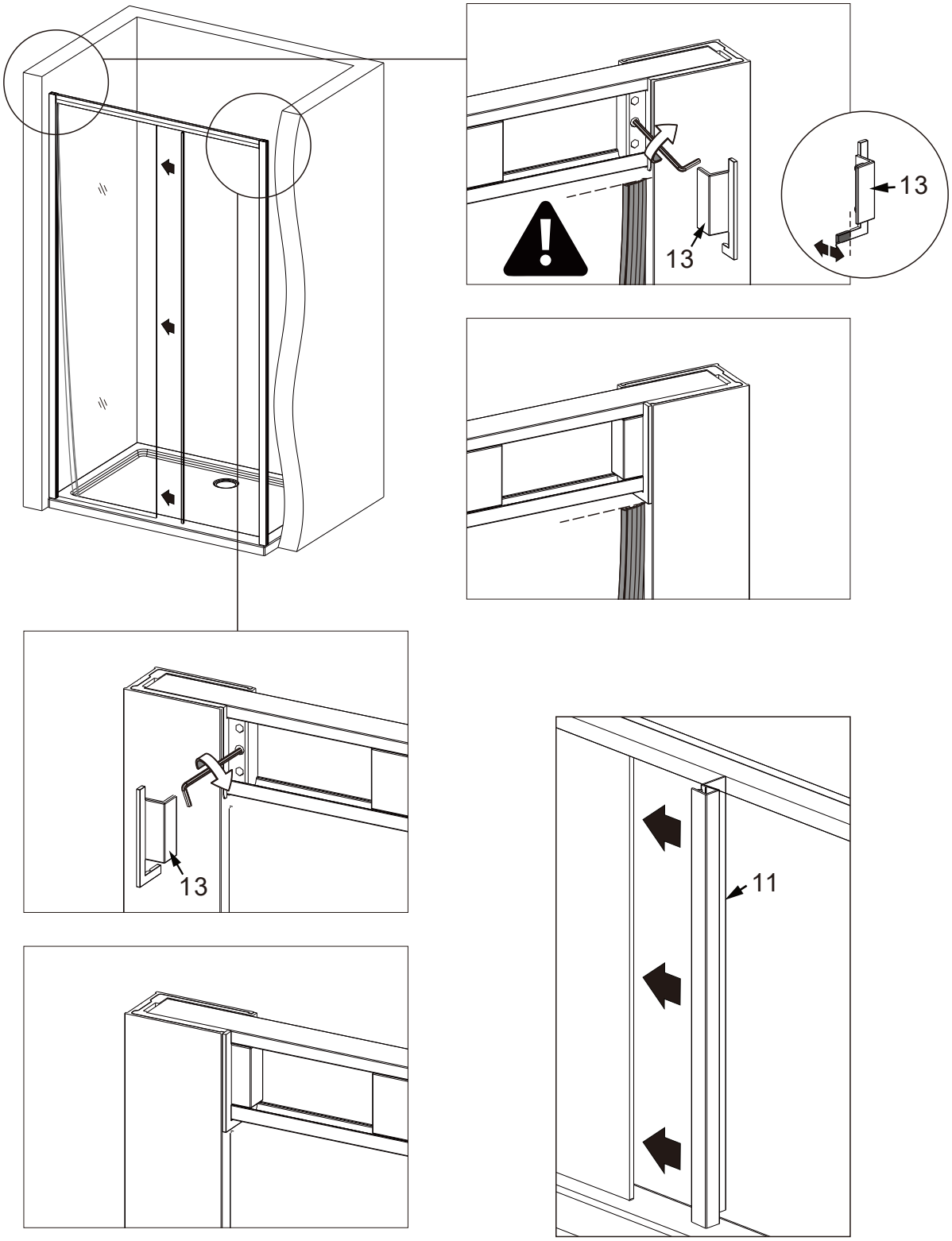

6

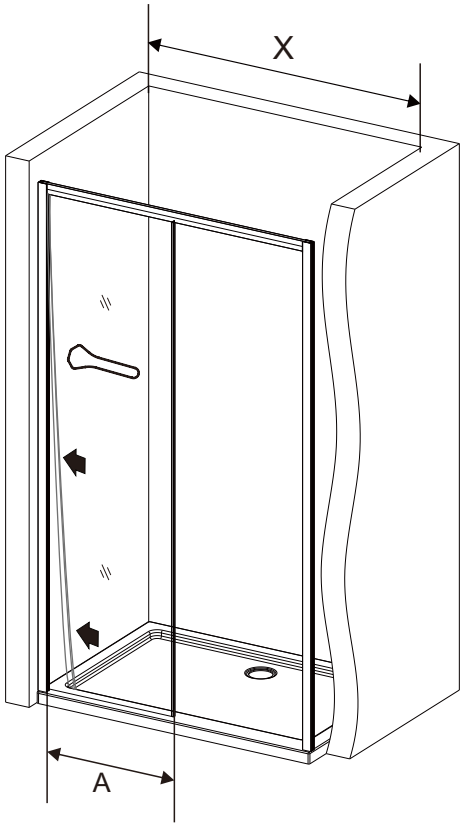

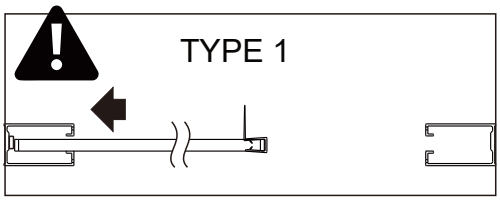

	X
1000	985-1010
1050	1035-1060
1100	1085-1110
1150	1135-1160
1200	1185-1210
1250	1235-1260
1300	1285-1310
1350	1335-1360
1400	1385-1410
1450	1435-1460
1500	1485-1510
1550	1535-1560
1600	1585-1610
1650	1635-1660
1700	1685-1710

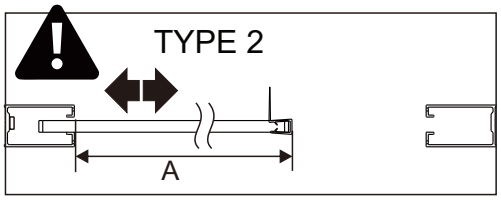

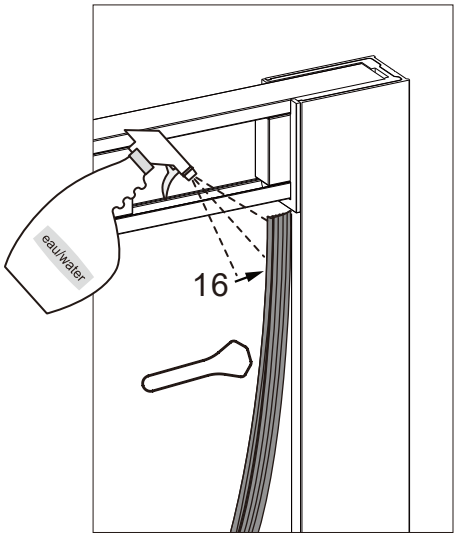

	X	A
1000	1010-1035	1035-X+421
1050	1060-1085	1085-X+446
1100	1110-1135	1135-X+471
1150	1160-1185	1185-X+496
1200	1210-1235	1235-X+521
1250	1260-1285	1285-X+546
1300	1310-1335	1335-X+571
1350	1360-1385	1385-X+596
1400	1410-1435	1435-X+621
1450	1460-1485	1485-X+646
1500	1510-1535	1535-X+671
1550	1535-1585	1585-X+696
1600	1610-1635	1635-X+721
1650	1660-1685	1685-X+746
1700	1710-1735	1735-X+771

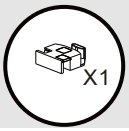

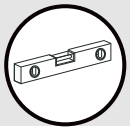

7

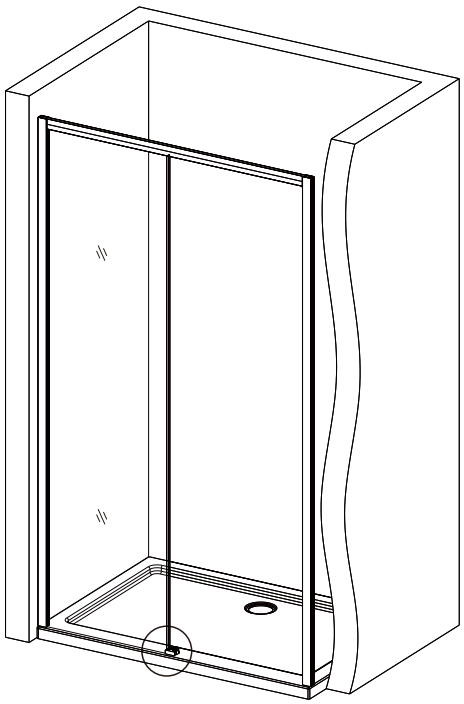

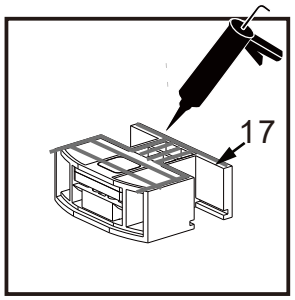

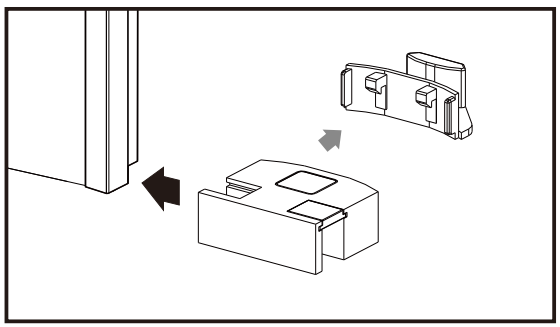

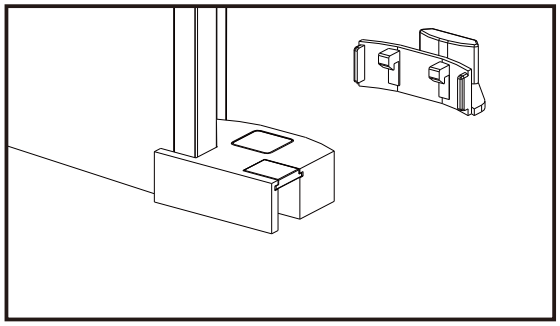

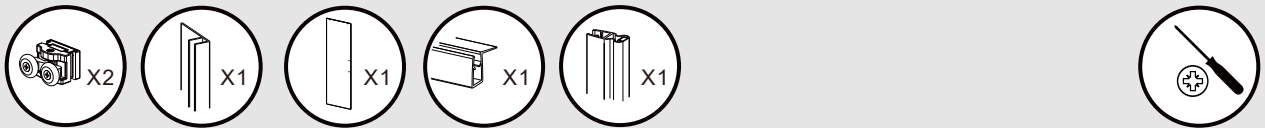

8

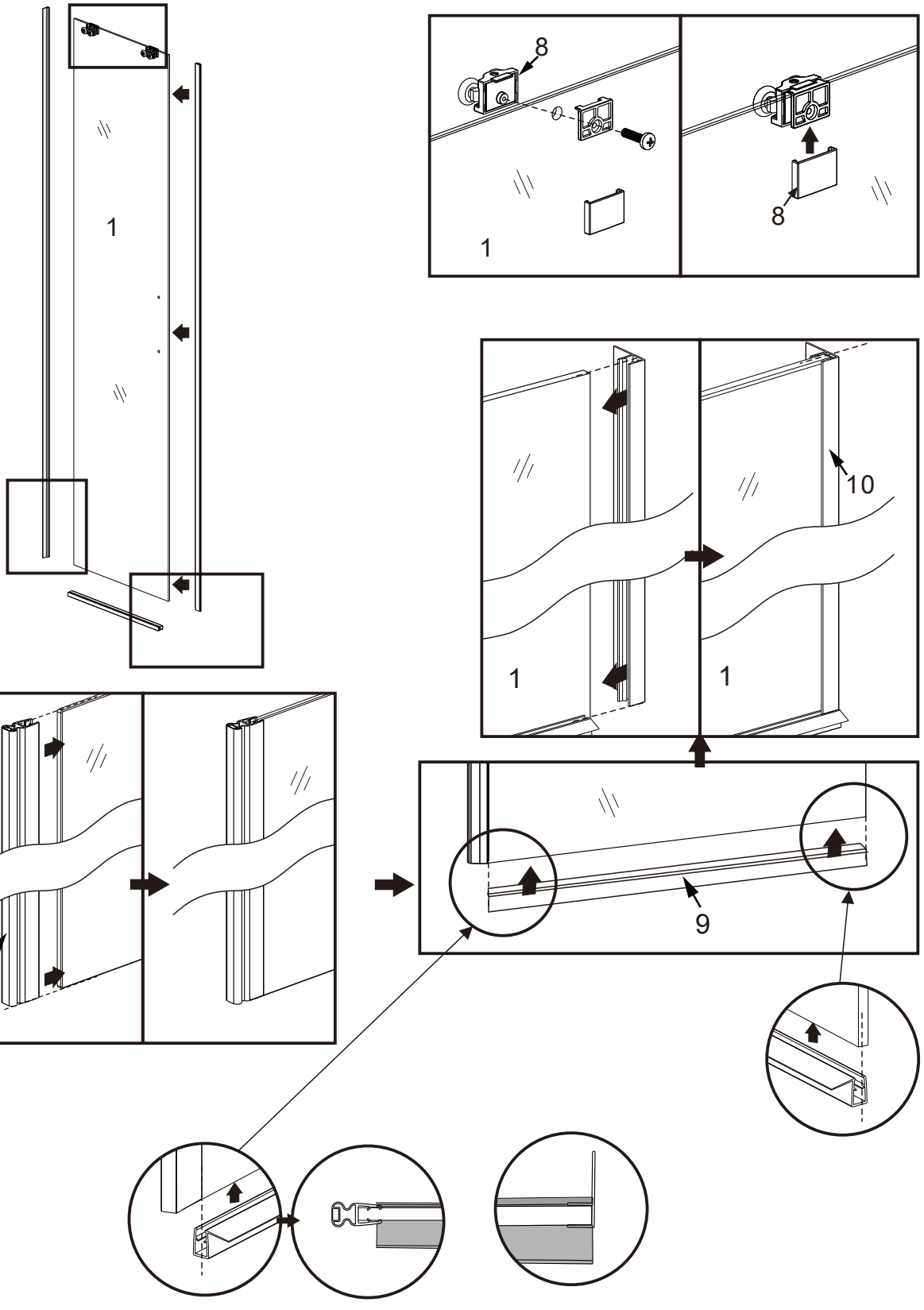

9

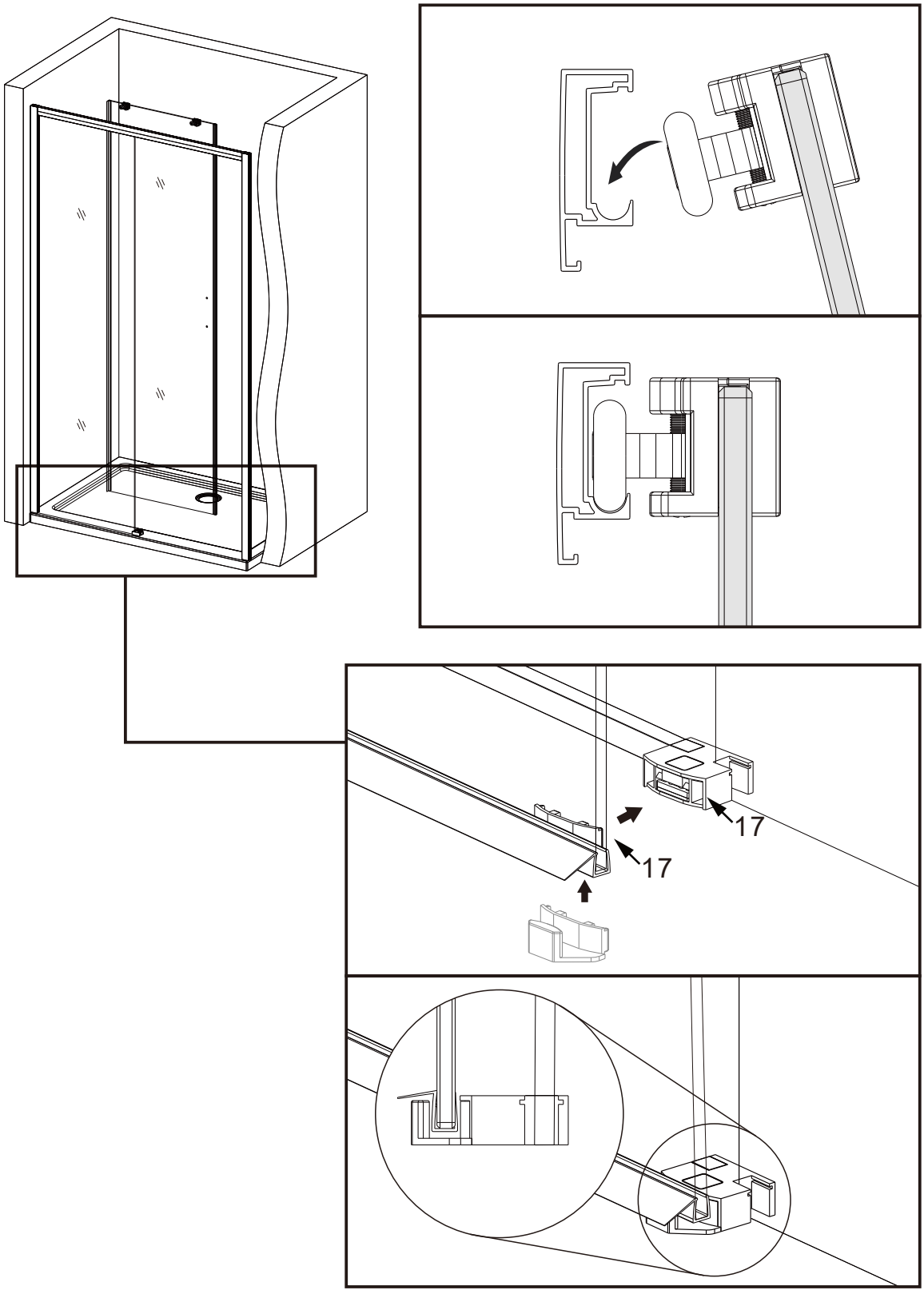

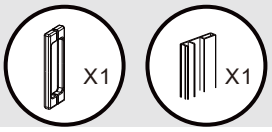

10

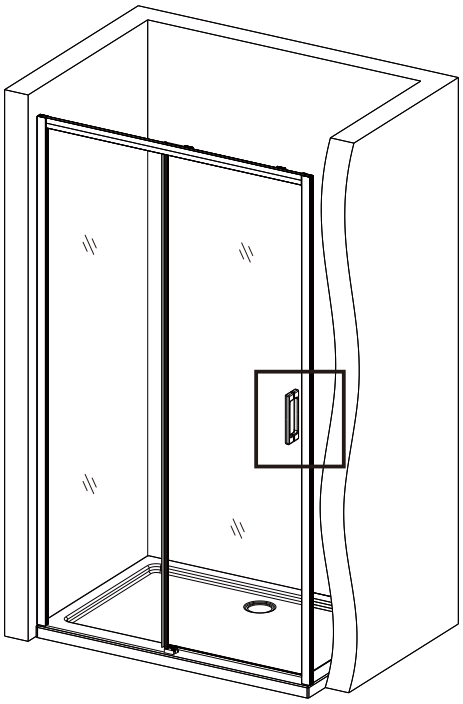

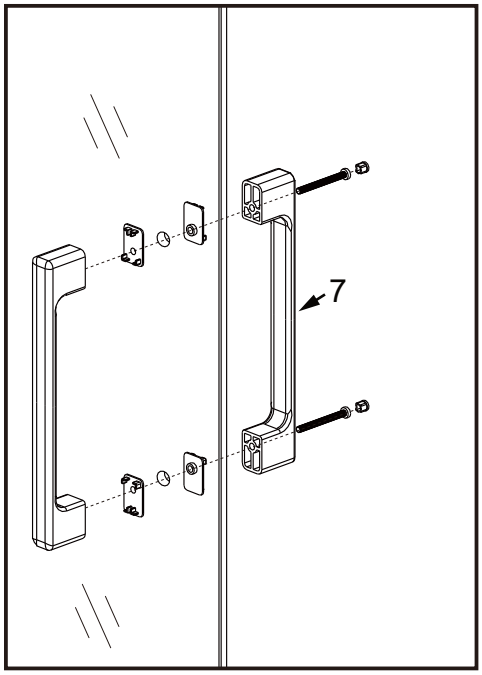

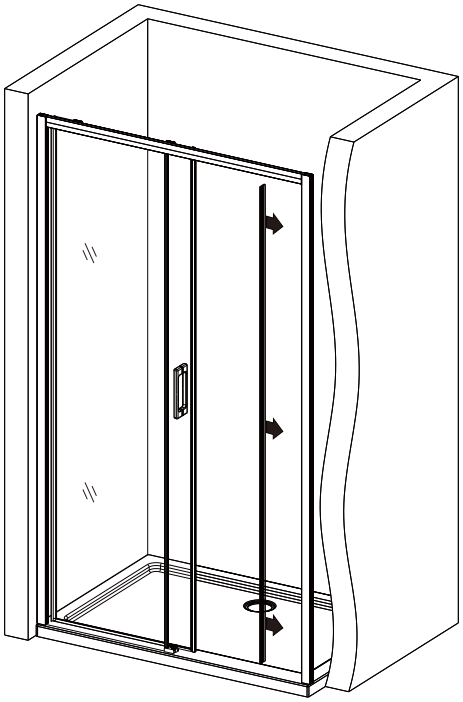

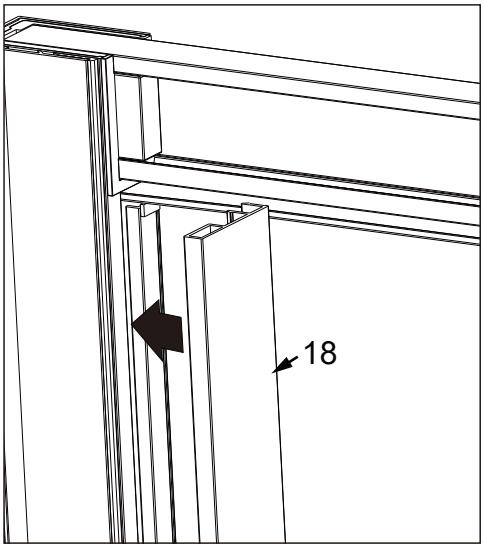

11

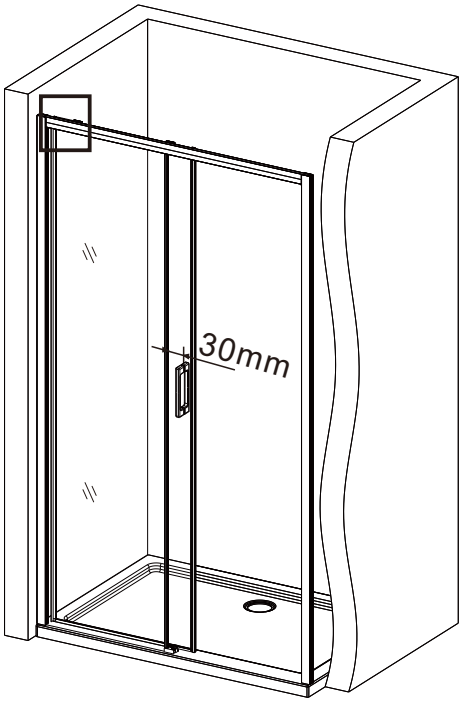

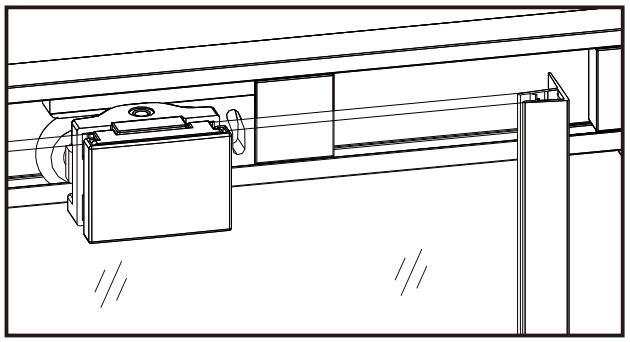

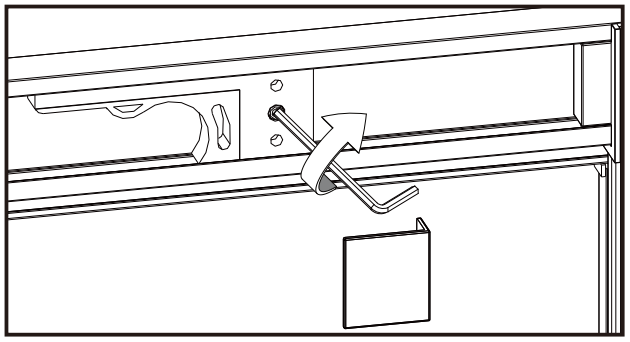

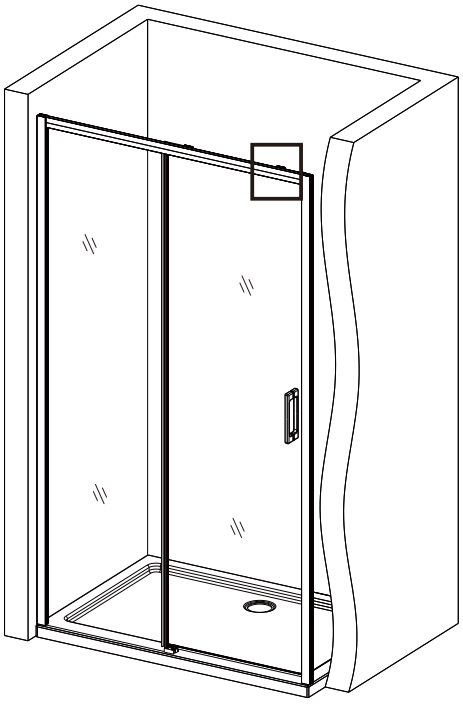

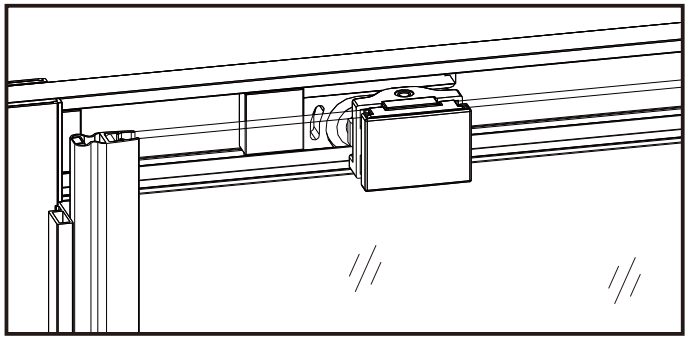

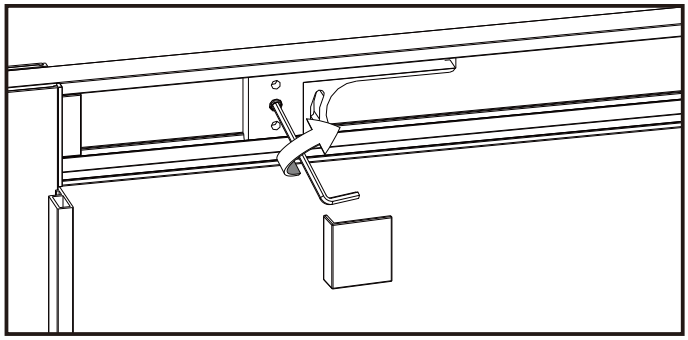

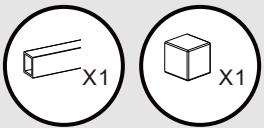

12

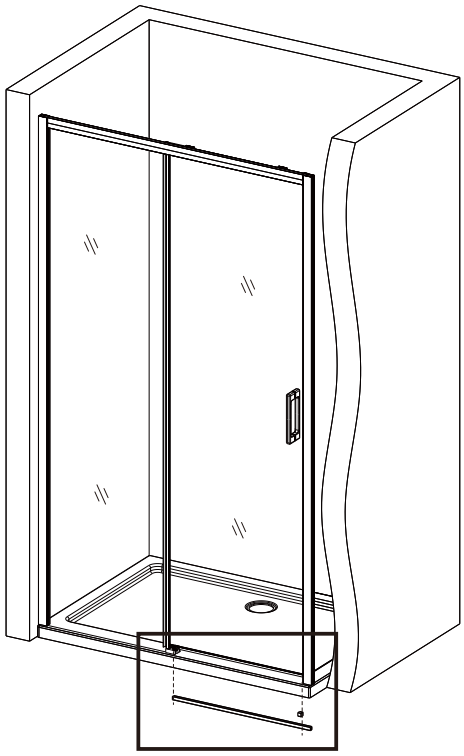

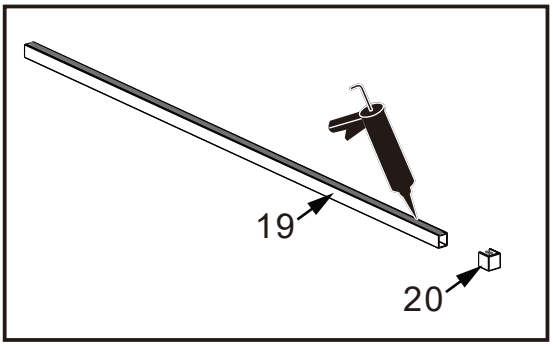

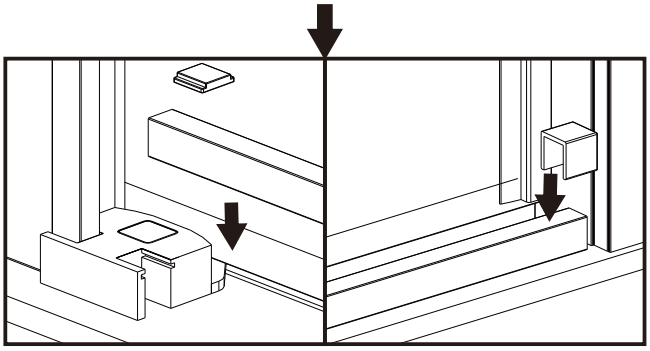

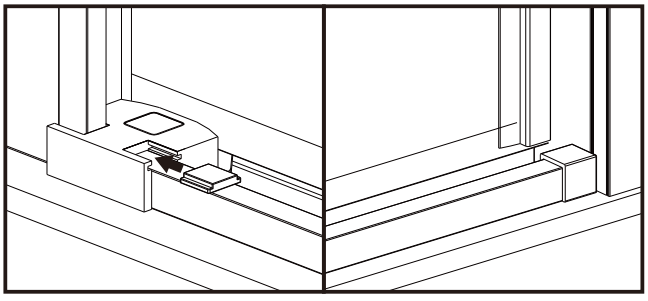

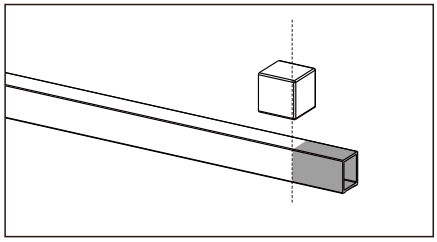

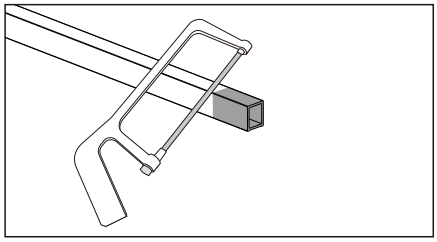

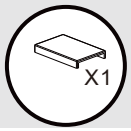

13

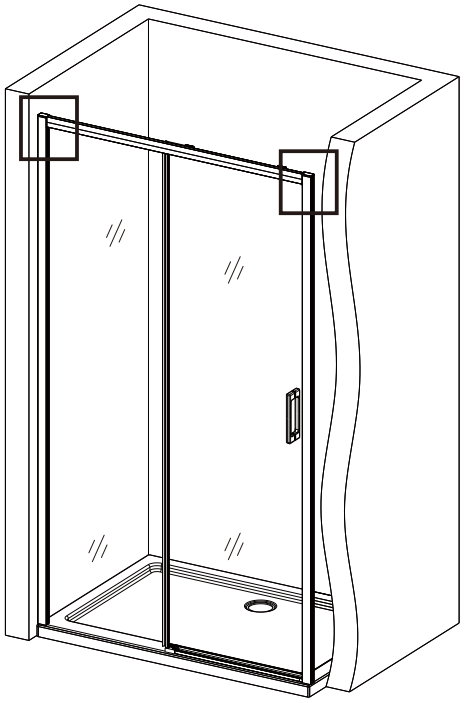

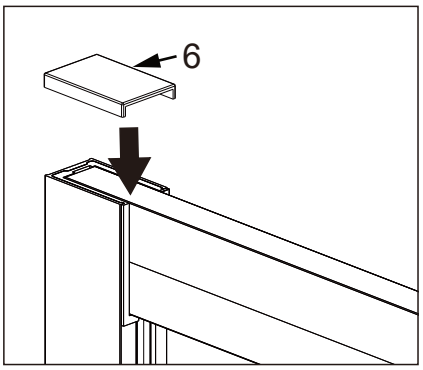

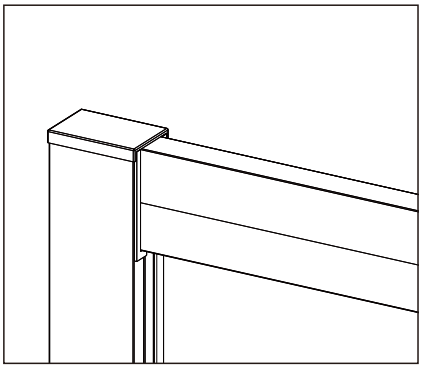

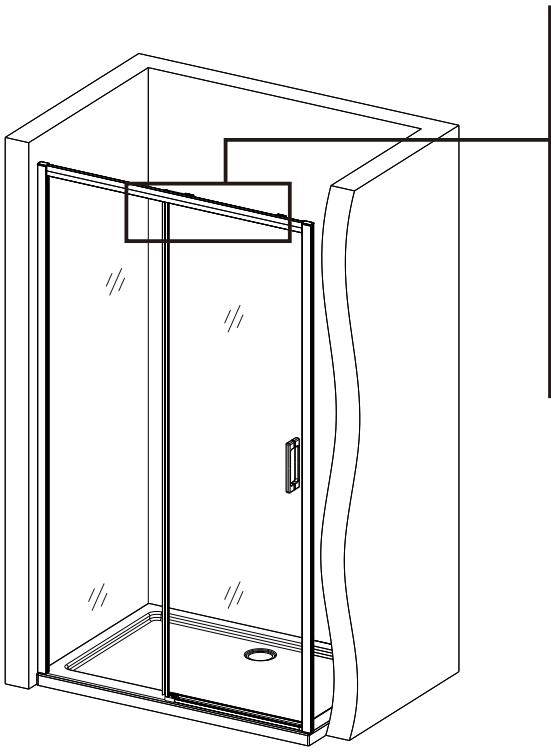

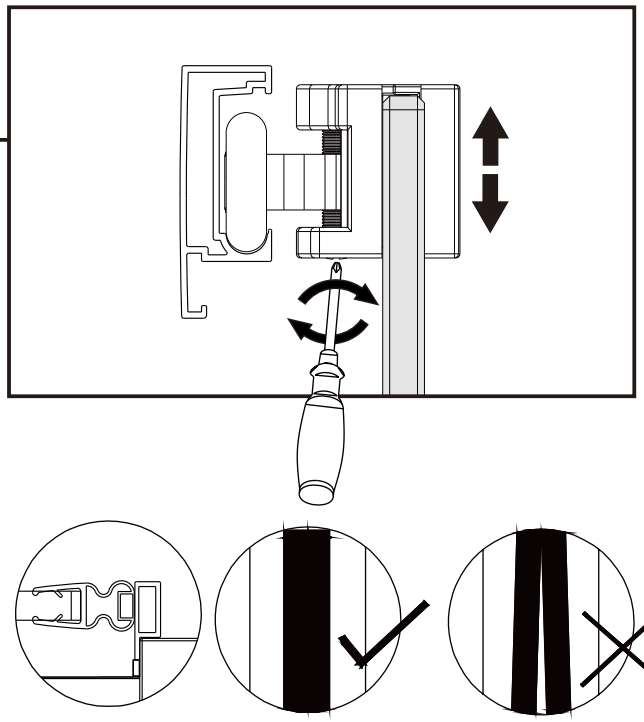
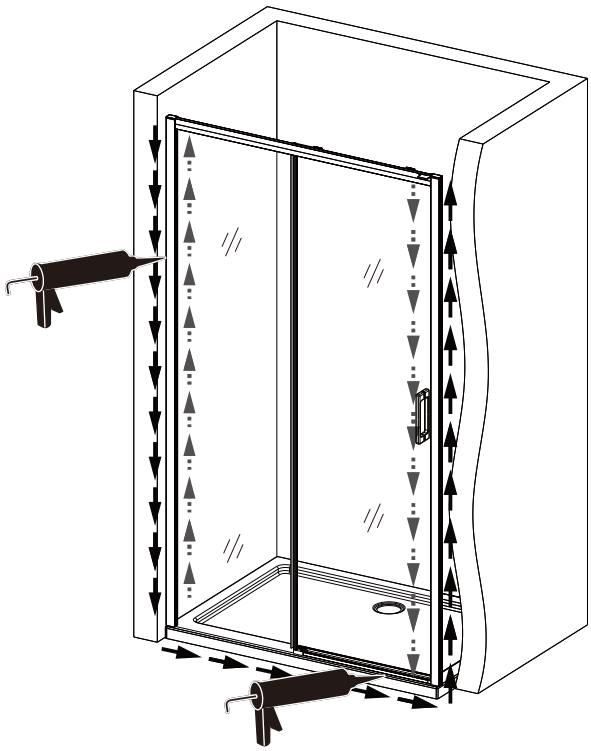
14