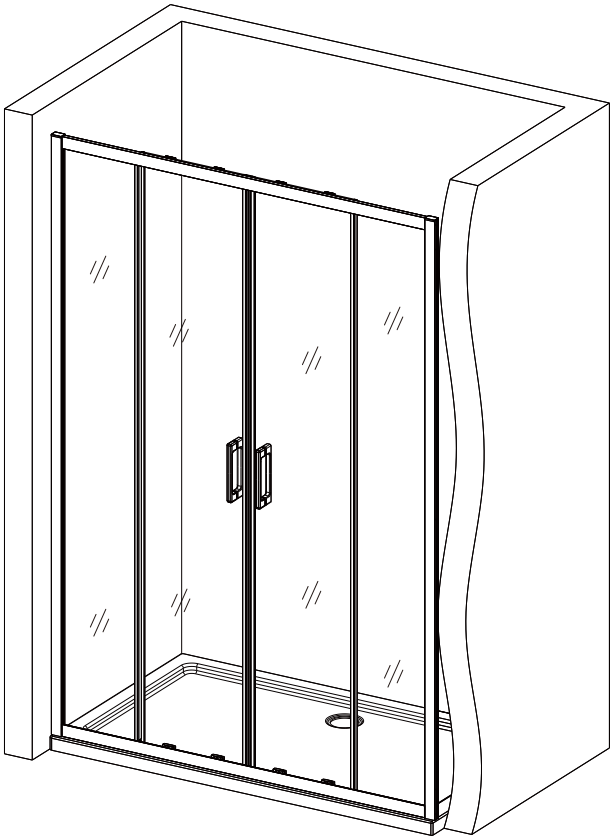

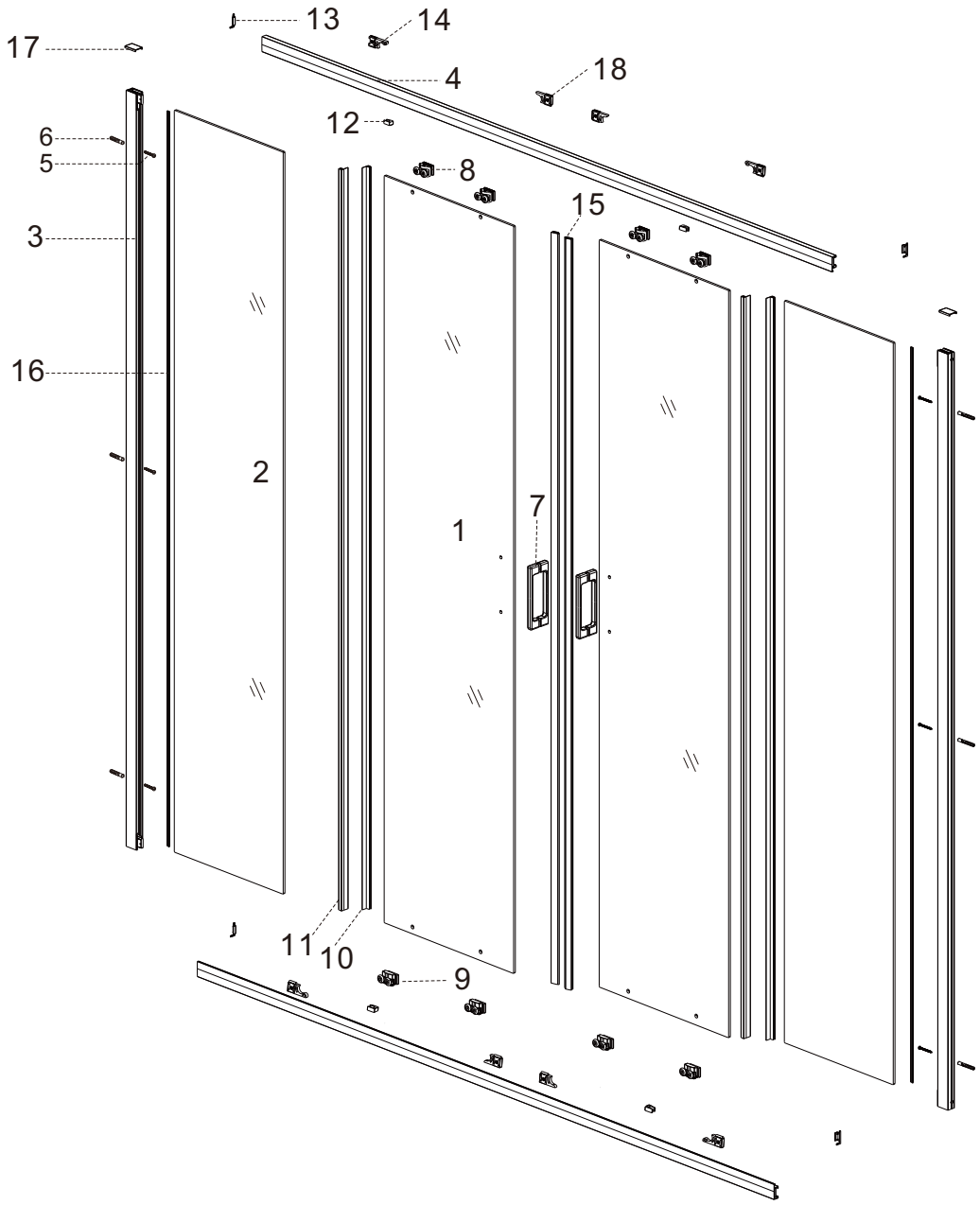
13
14
17
4
18
12
6
5
8
15
3
16
2
1
7
11
10
9

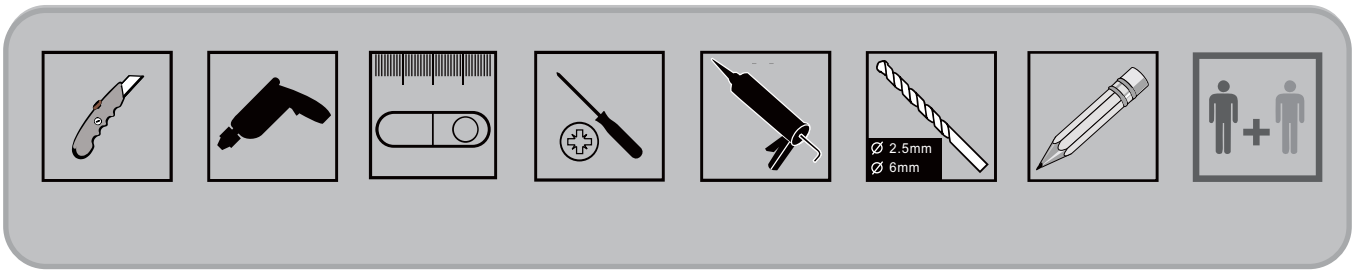
Ø 2.5mm
Ø 6mm

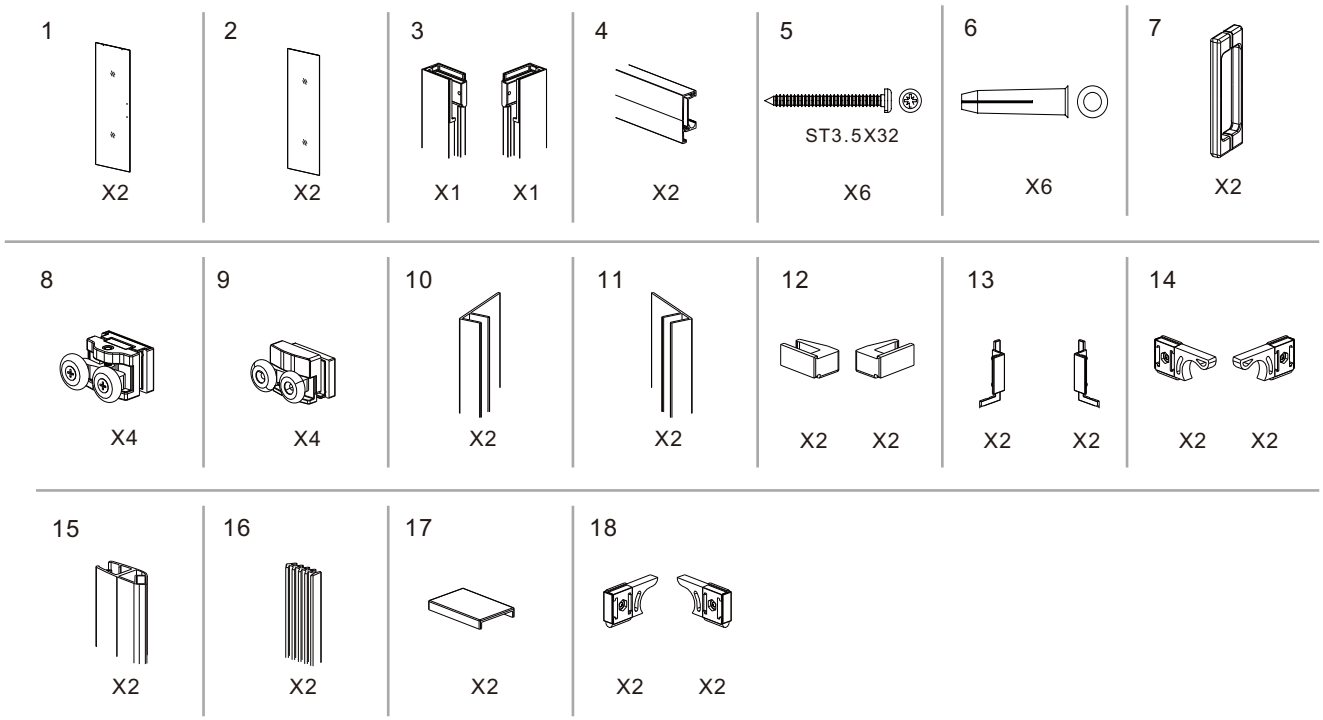
1
X2
2
X2
3
X1
X1
4
X2
5
ST3.5X32
X6
6
X6
7
X2
8
X4
9
X4
10
X2
11
X2
12
X2
X2
13
X2
X2
14
X2
X2
15
X2
16
X2
17
X2
18
X2
X2

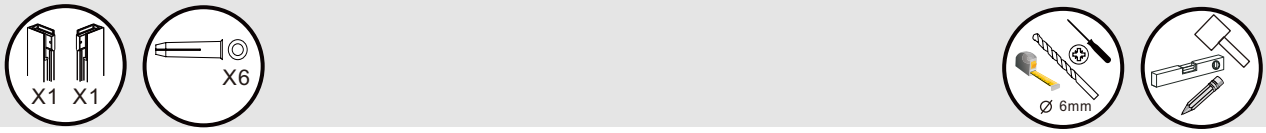

1

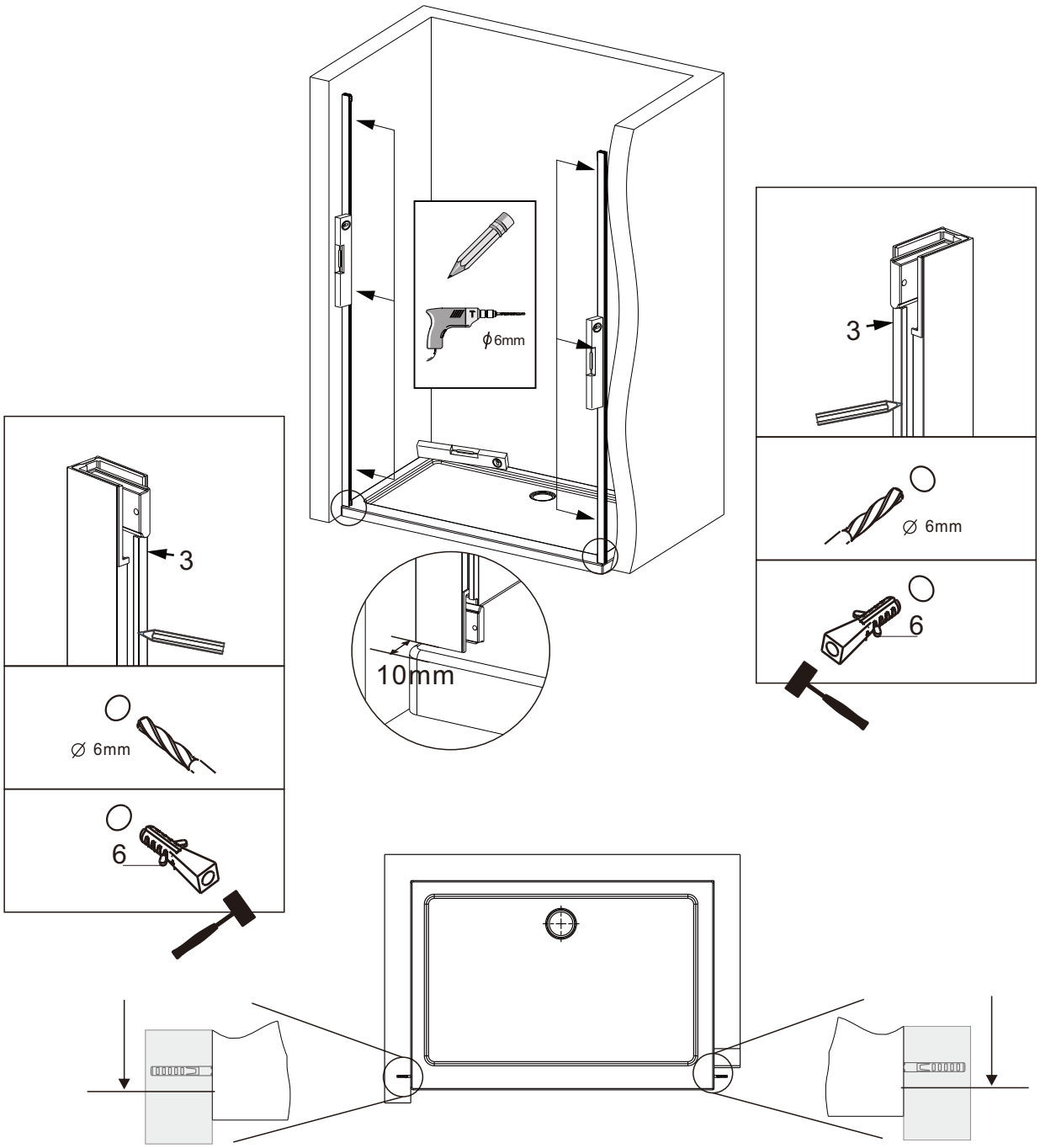

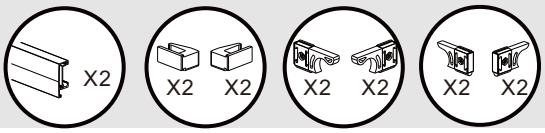

2

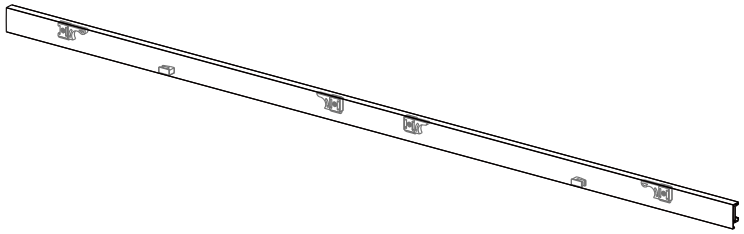

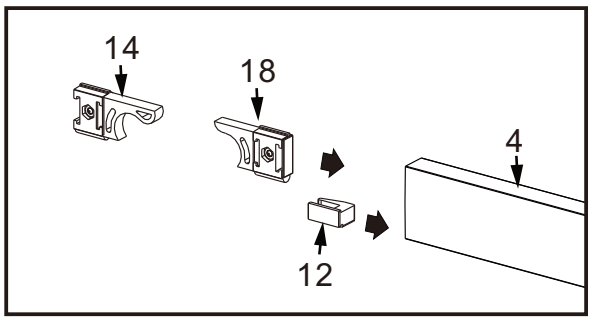

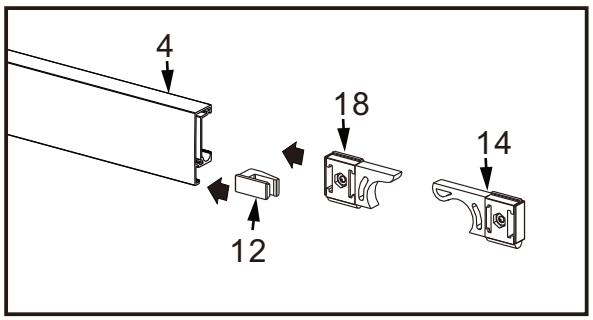

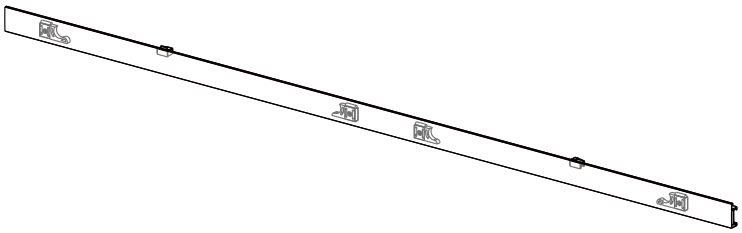

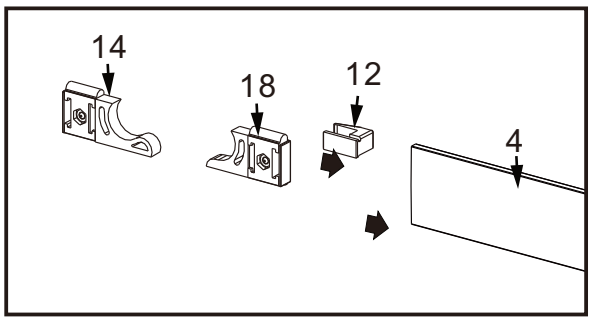

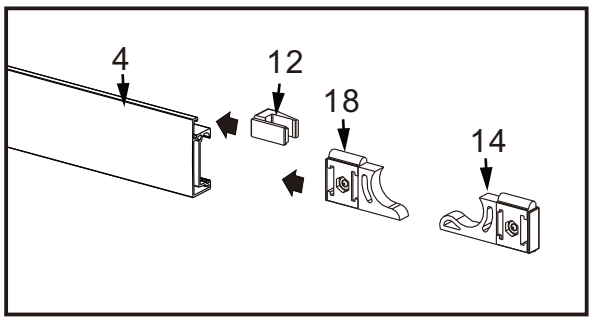

3

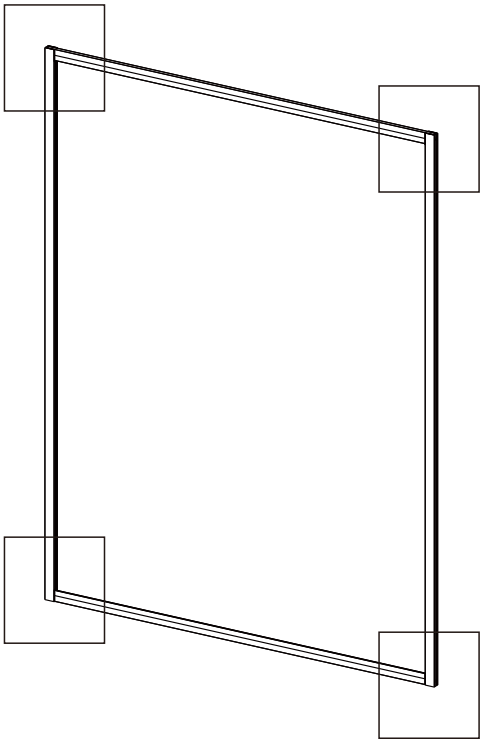

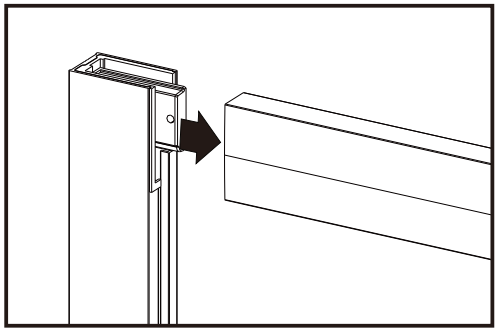

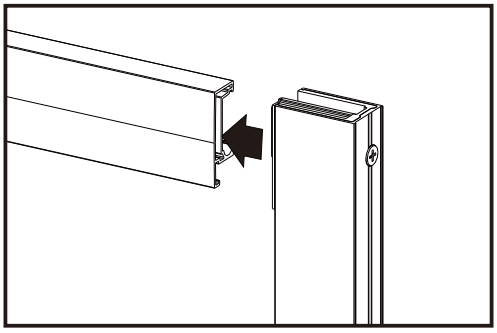

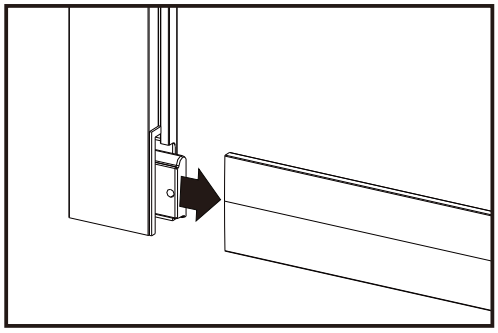

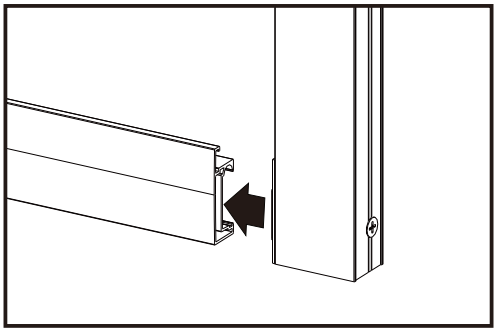

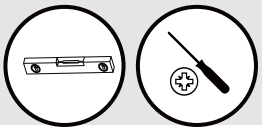

4

	X	Y
1400	1385-1435	(X-1385)/2
1450	1435-1485	(X-1485)/2
1500	1485-1535	(X-1485)/2
1550	1535-1585	(X-1535)/2
1600	1585-1635	(X-1585)/2
1650	1635-1685	(X-1635)/2
1700	1685-1735	(X-1685)/2
1750	1735-1785	(X-1735)/2
1800	1785-1835	(X-1785)/2
1850	1835-1885	(X-1835)/2
1900	1885-1935	(X-1885)/2
1950	1935-1985	(X-1935)/2
2000	1985-2035	(X-1985)/2

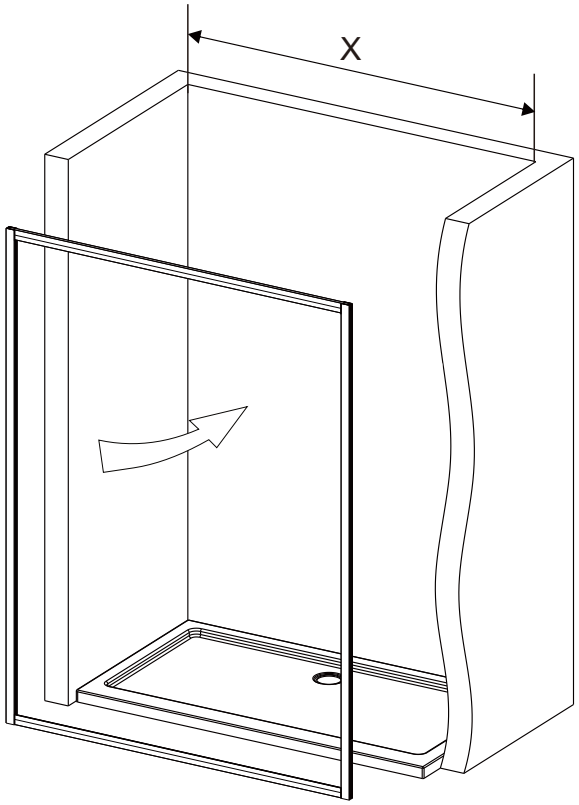

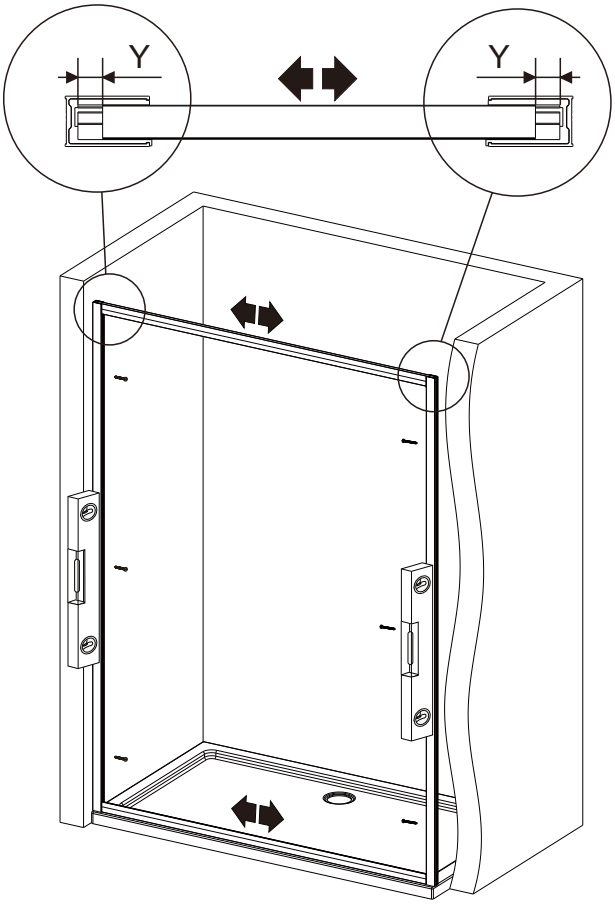

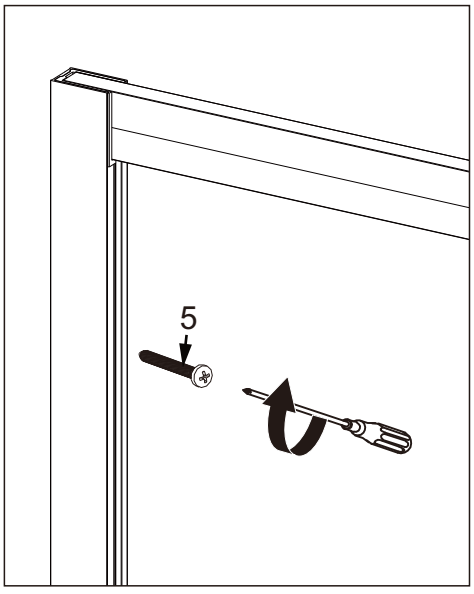

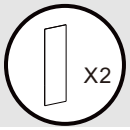

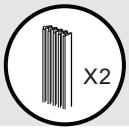

5

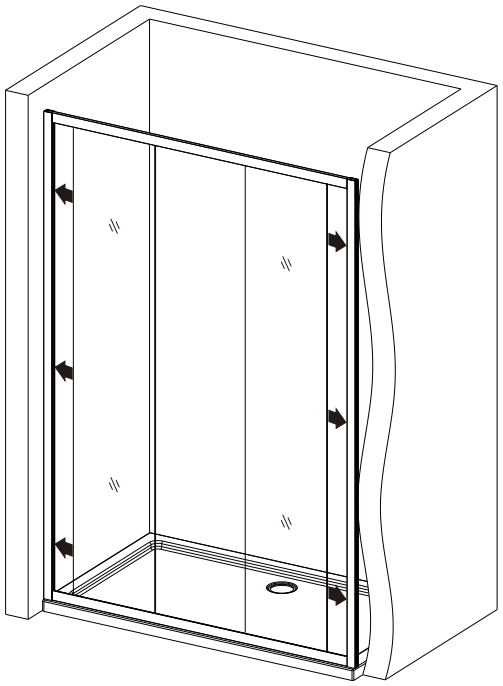

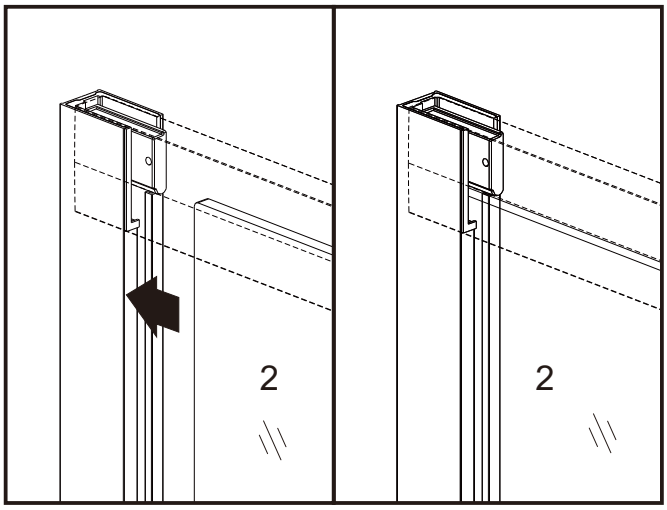

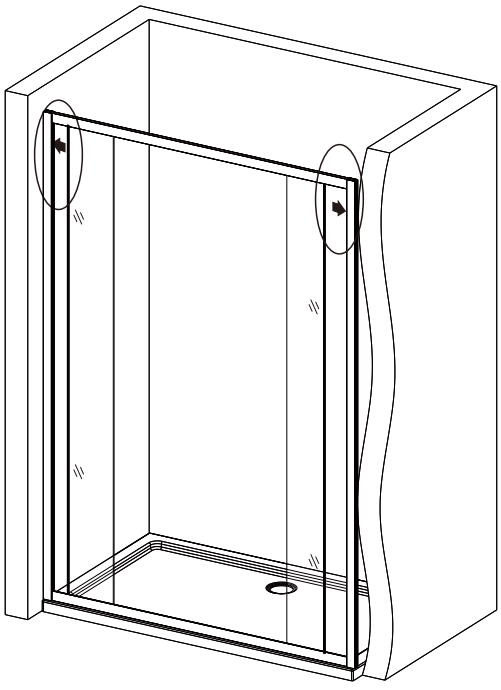

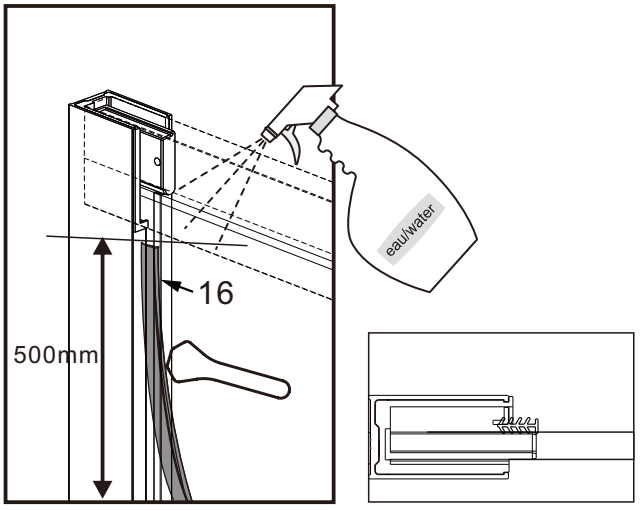

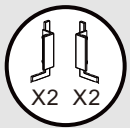

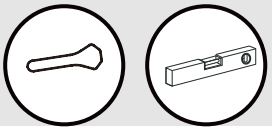

6

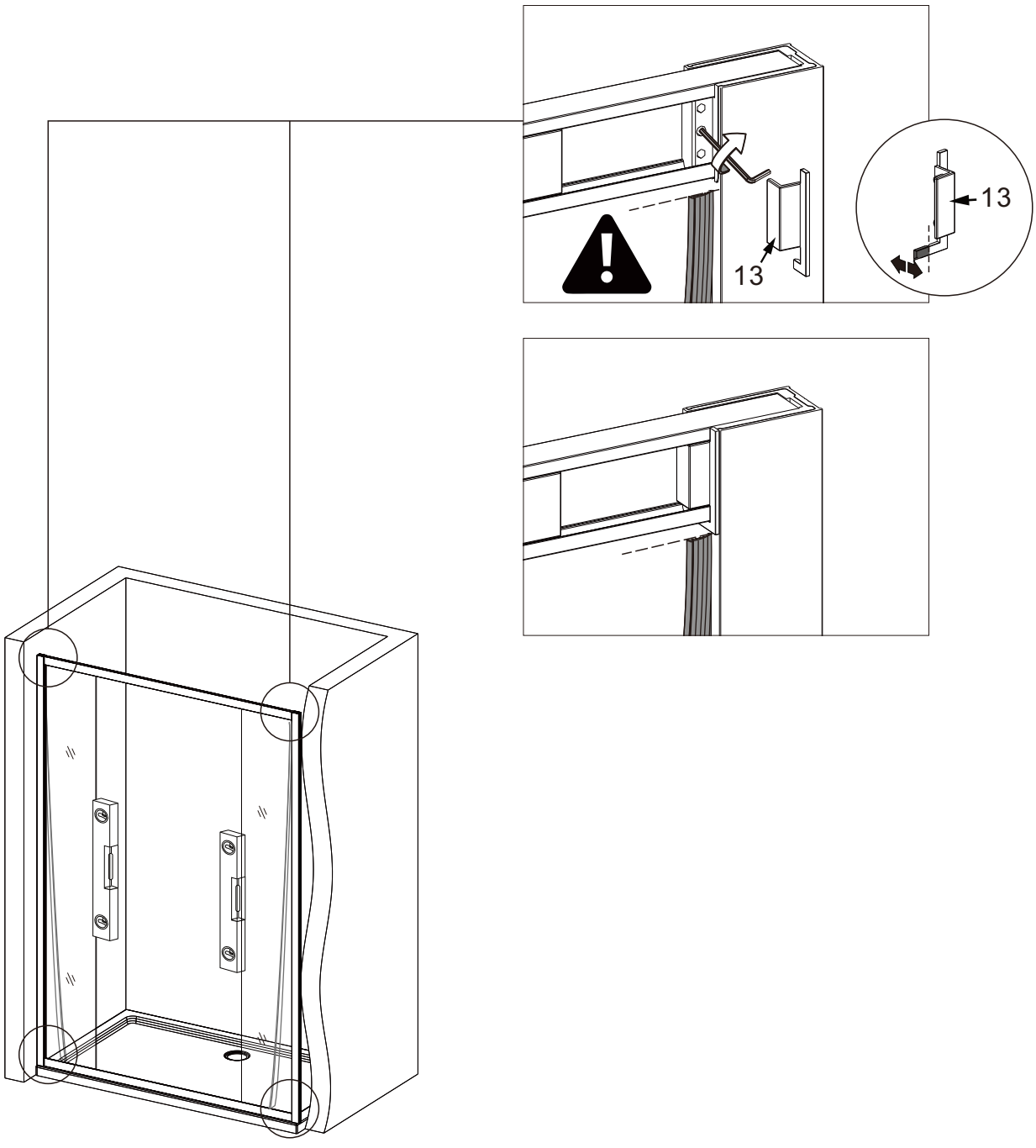

7

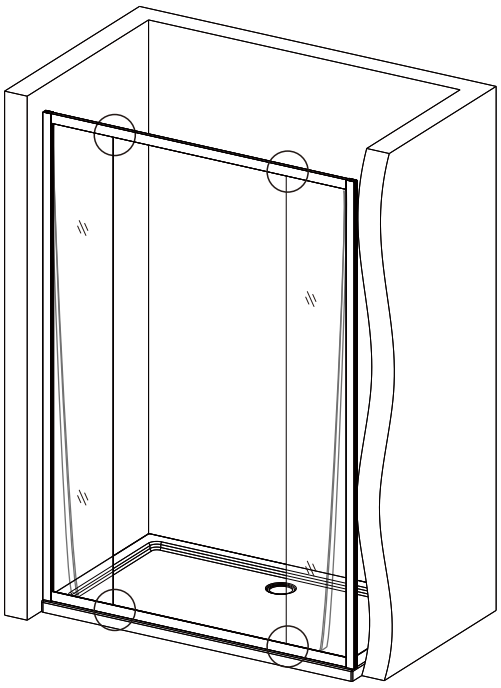

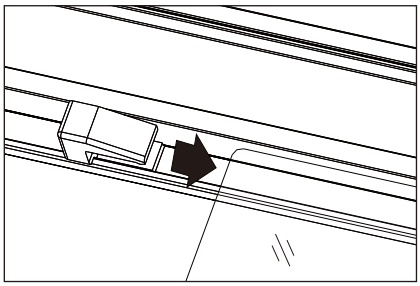

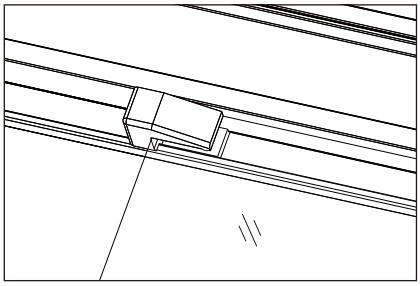

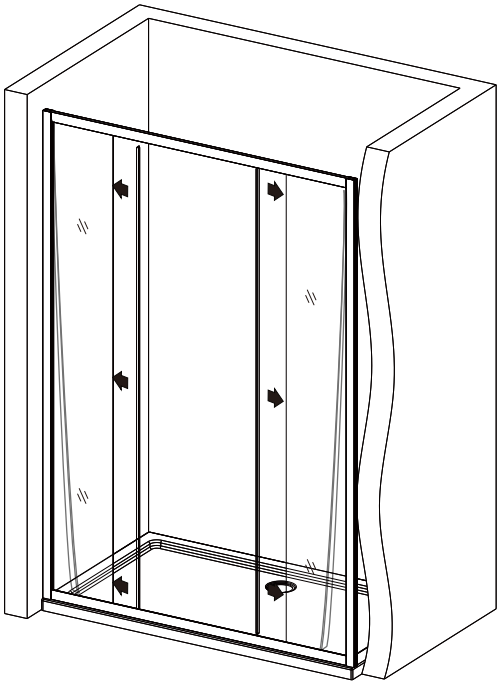

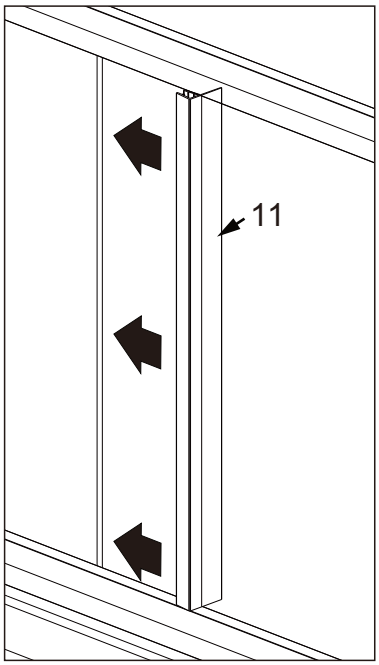

8

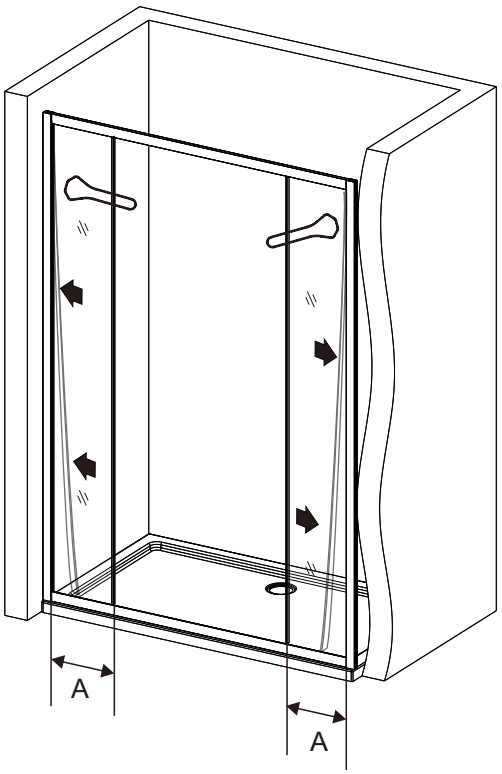

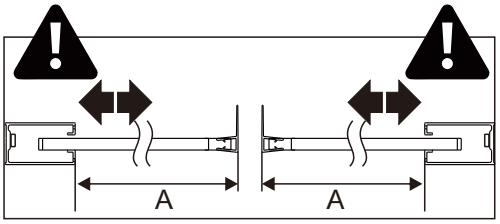

	X	A
1400	1385-1435	(1435-X)/2+277
1450	1435-1485	(1485-X)/2+290
1500	1485-1535	(1535-X)/2+302
1550	1535-1585	(1585-X)/2+315
1600	1585-1635	(1635-X)/2+327
1650	1635-1685	(1685-X)/2+340
1700	1685-1735	(1735-X)/2+352
1750	1735-1785	(1785-X)/2+365
1800	1785-1835	(1835-X)/2+377
1850	1835-1885	(1885-X)/2+390
1900	1885-1935	(1935-X)/2+402
1950	1935-1985	(1985-X)/2+415
2000	1985-2035	(2035-X)/2+427

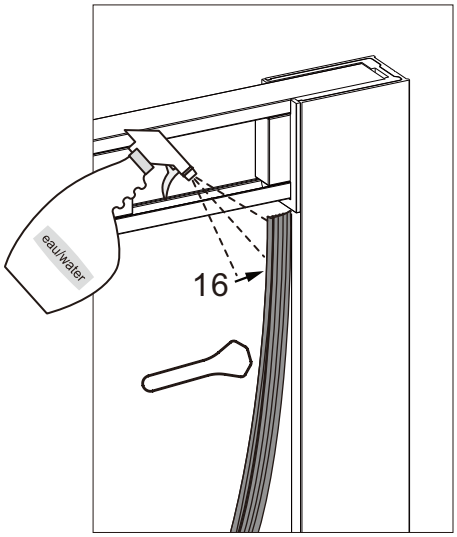

9

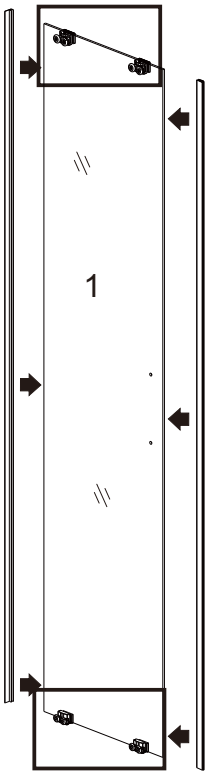

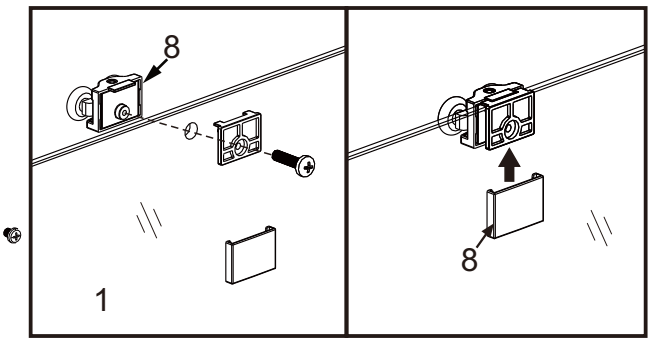

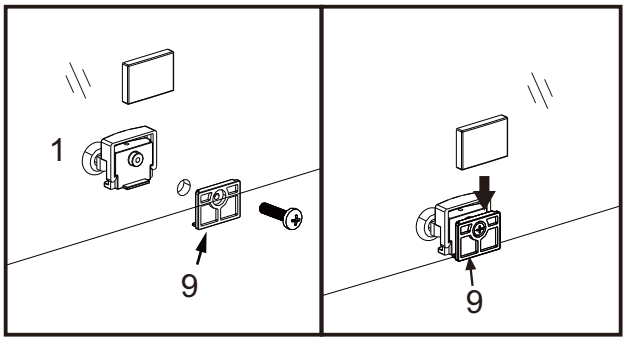

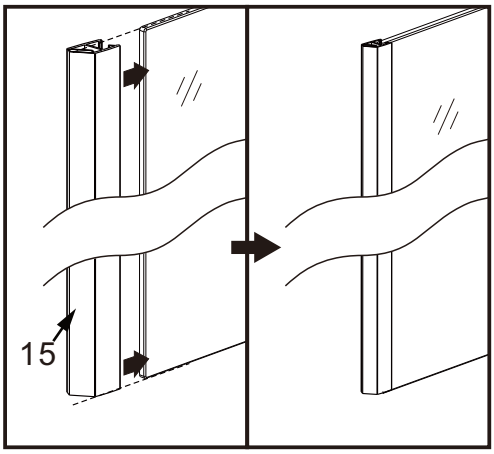

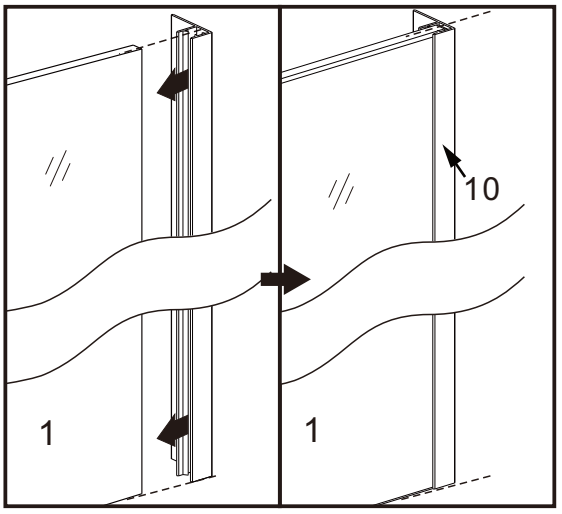

10

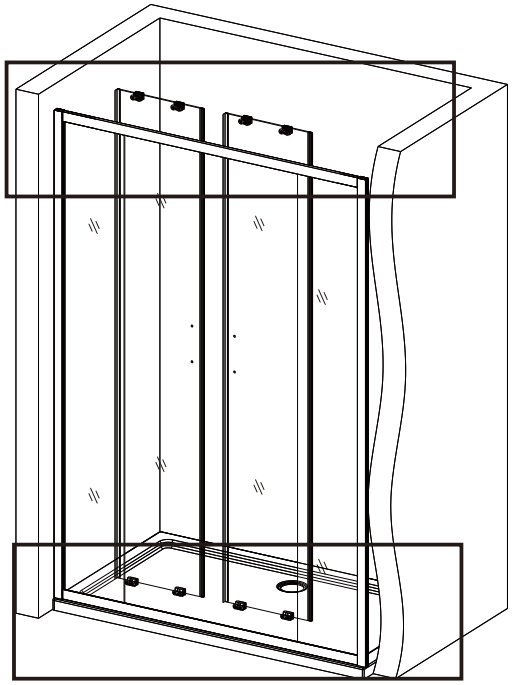

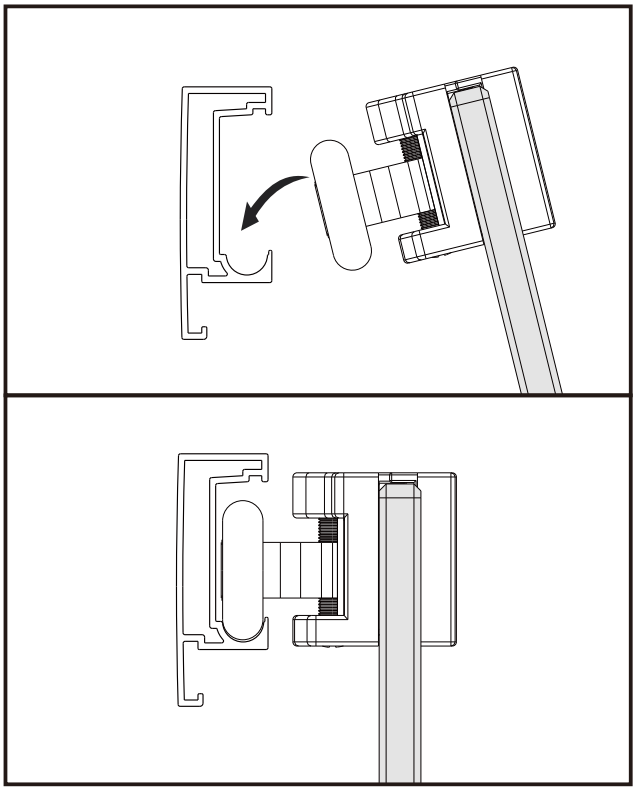

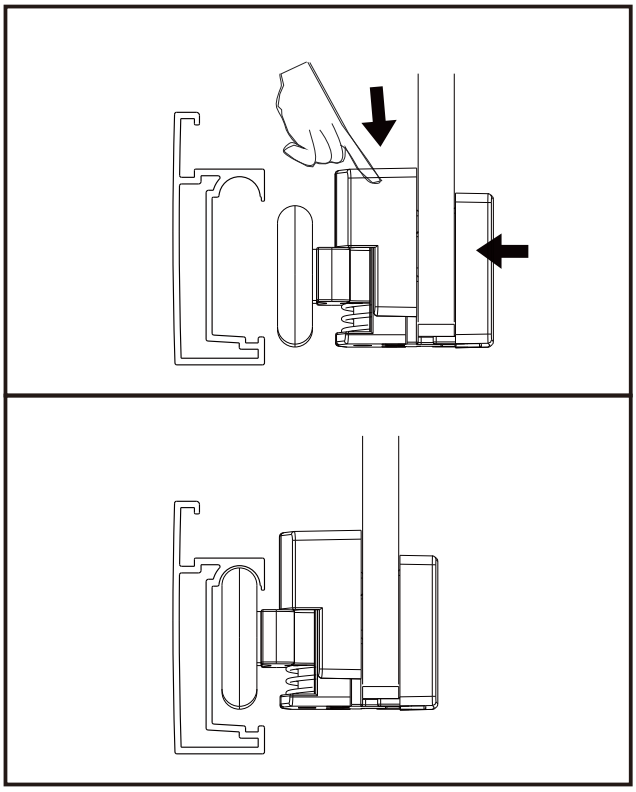

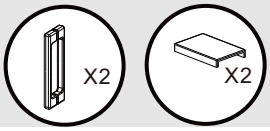

11

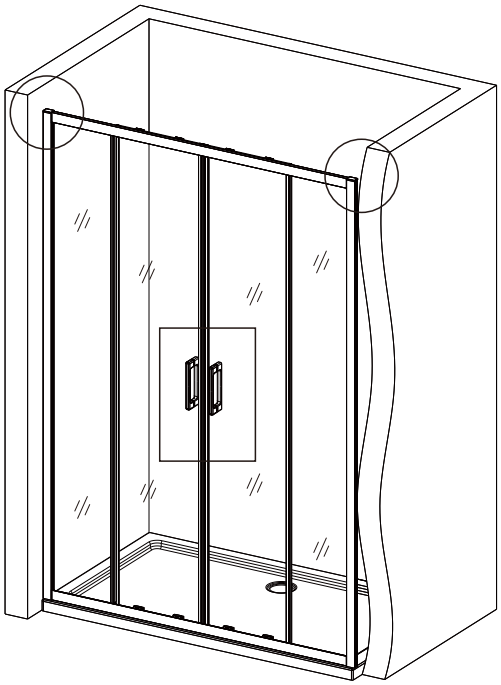

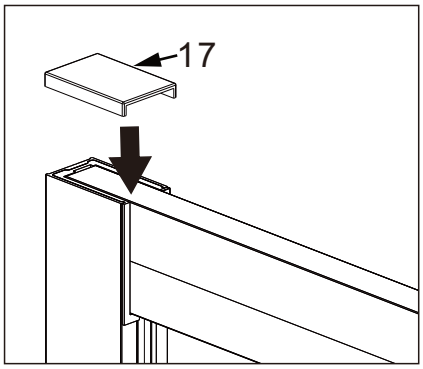

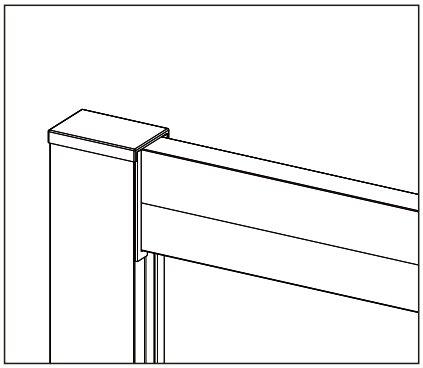

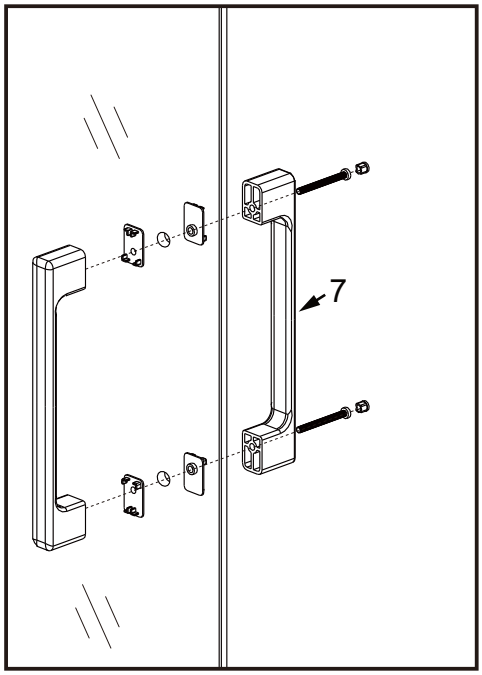

12

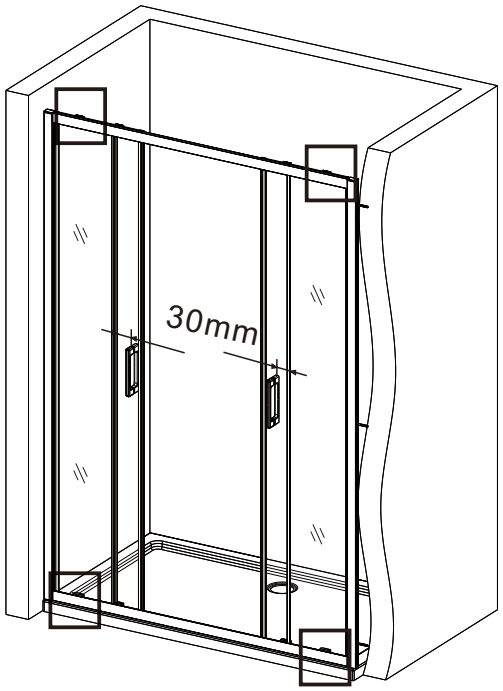

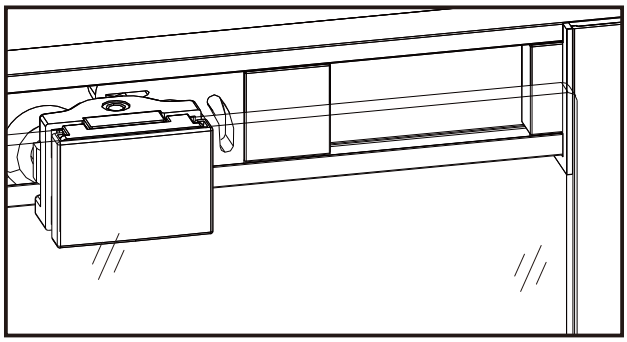

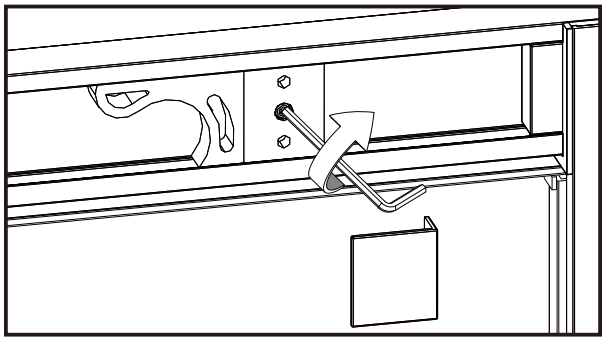

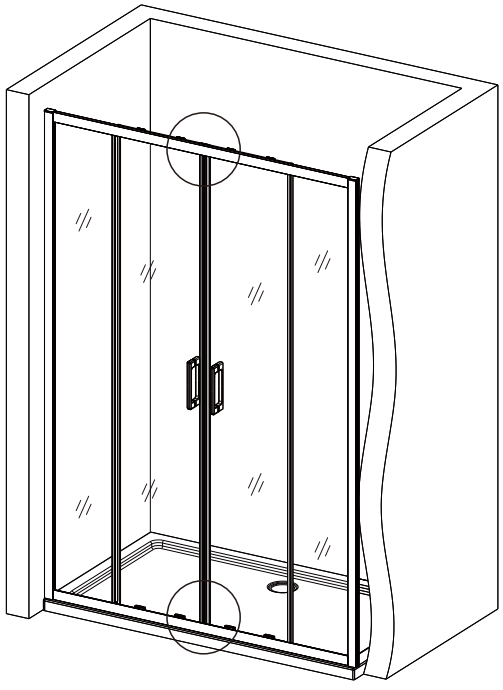

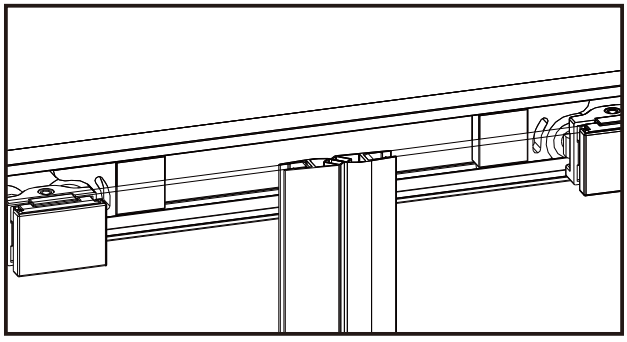

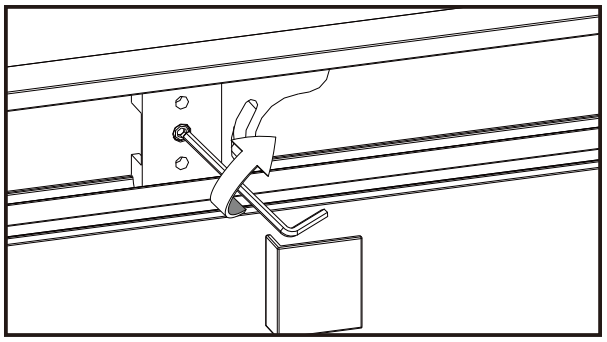
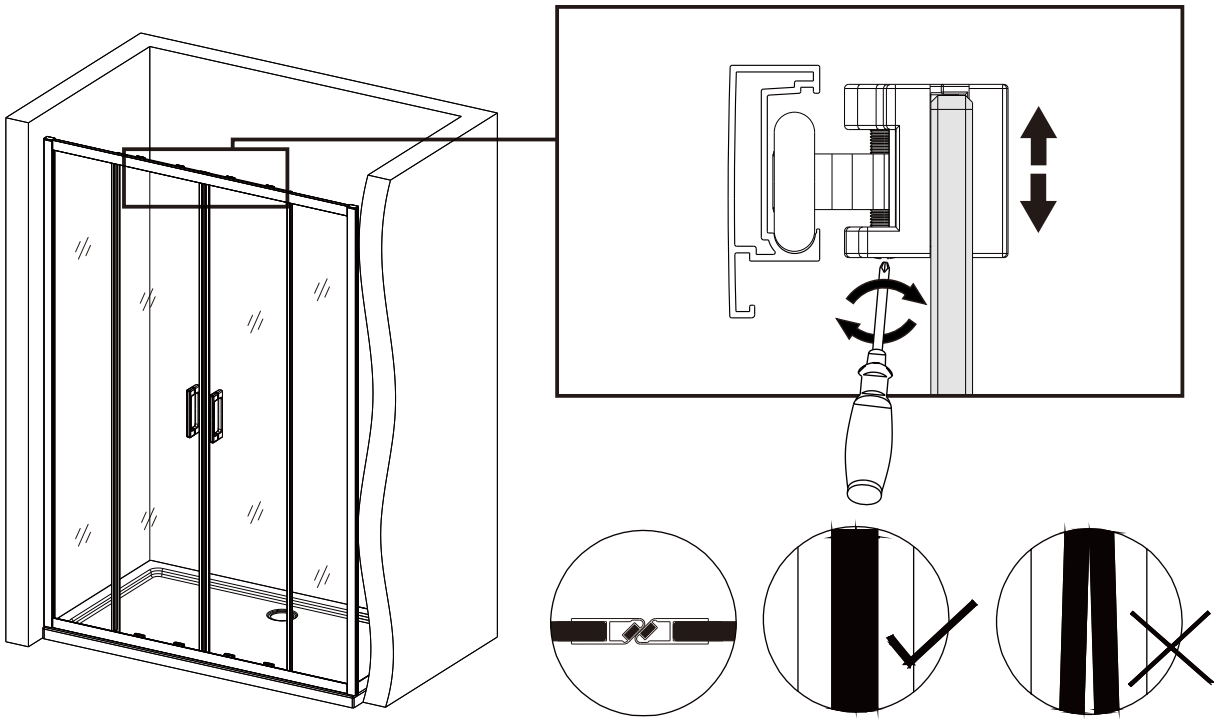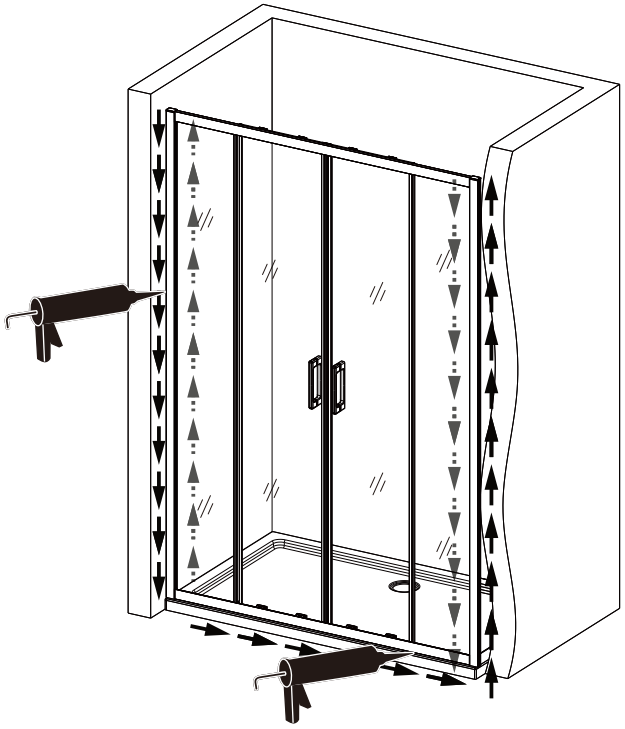
13